COMPONENTS FOR PLUMBING AND HEATING SYSTEMS

rbm

COMPOSANTS POUR INSTALLATIONS HYDROTHERMIQUES

КОМПОНЕНТЫ ДЛЯ СИСТЕМ ОТОПЛЕНИЯ

COMPONENTE PENTRU INSTALATII HIDROTERMICE

COMPONENTES PARA SISTEMAS HIDRO-TÉRMICOS

KOMPONENTEN FÜR HYDROTHERMISCHE SYSTEME

100% MADE IN ITALY

INDEX CODE - PAGE

Code Code APT. Cod Código Kode	Page Page CTP. Pagina Página Seite
10.03.00	6.15
10.04.00	6.15
10.05.00	6.15
10.06.00	6.15
10.07.00	6.15
100.06.50	7.03
101.06.50	7.03
102.06.50	7.03
1028.04.00	6.21
1028.05.00	6.21
105.00.00	7.13
106.00.00	7.13
108.00.00	7.14
1100.05.00	10.05
1100.06.00	10.05
111.04.00	5.04
111.05.00	5.04
111.06.00	5.04
111.07.00	5.04
111.08.00	5.04
111.09.00	5.04
112.04.70	8.00
112.05.70	8.00
112.06.70	8.00
113.04.70	8.00
113.05.70	8.00
113.06.70	8.00
1138.00.20	6.27
1138.00.30	6.27
1139.03.00	5.08
1139.04.00	5.08
1139.05.00	5.08
114.05.20	8.00
114.05.70	8.00
114.06.20	8.00
114.06.70	8.00
1143.00.00	7.07
1147.03.00	3.00
1147.04.00	3.00
1147.05.00	3.00
1147.06.00	3.00
1147.07.00	3.00
1147.08.00	3.00
1147.09.00	3.00
1150.05.00	7.02
1150.05.10	7.02
1150.05.20	7.02
1150.05.30	7.02
1150.05.40	7.02
1150.05.50	7.02
1150.05.60	7.02
1150.06.00	7.02
1150.06.10	7.02
1150.06.20	7.02
1150.06.30	7.02
1150.06.40	7.02
1150.06.50	7.02
1150.06.60	7.02
1150.06.80	7.02
116.12.00	7.11
116.14.00	7.11
116.15.00	7.11
116.16.00	7.11
116.18.00	7.11
116.22.00	7.11
120.04.00	5.11
120.05.00	5.11
120.06.00	5.11
120.07.00	5.11
120.08.00	5.11
120.09.00	5.11
120.10.00	5.11
120.11.00	5.11
120.13.00	5.11
121.04.00	5.11
121.05.00	5.11
121.06.00	5.11
121.07.00	5.11
121.08.00	5.11
121.09.00	5.11

Code Code APT. Cod Código Kode	Page Page CTP. Pagina Página Seite
121.10.00	5.11
121.11.00	5.11
121.13.00	5.11
1213.005	5.11
1216.14.00	10.02
1216.16.00	10.02
122.12.00	10.01
122.16.00	10.01
122.20.00	10.01
123.12.00	10.08
123.16.00	10.08
123.20.00	10.08
124.05.00	1.06
124.06.00	1.06
124.07.00	1.06
124.22.00	1.06
126.03.10	5.02
126.04.10	5.02
126.05.10	5.02
126.06.10	5.02
126.07.10	5.02
126.08.10	5.02
126.09.10	5.02
126.10.10	5.02
126.11.10	5.02
126.13.10	5.02
128.05.00	9.01
128.06.00	9.01
129.05.00	9.01
129.06.00	9.01
1330.05.00	7.08
1330.05.60	7.08
1330.06.00	7.08
1330.06.60	7.08
1331.30.00	7.08
134.05.50	7.04
1342.03.00	6.06
1342.04.00	6.06
1343.03.00	6.06
1343.04.00	6.06
1344.03.00	6.07
1344.04.00	6.07
1345.03.00	6.07
1345.04.00	6.07
135.05.50	7.04
139.10.50	10.06
139.10.50	10.13
139.12.50	10.06
139.12.50	10.13
139.14.50	10.06
139.14.50	10.13
139.15.50	10.13
1390.05.00	7.11
140.04.00	10.14
1401.10.00	10.13
1401.12.00	10.13
1401.14.00	10.13
1401.15.00	10.13
1401.16.00	10.13
1422.02.00	3.05
150.05.50	7.04
151.03.00	6.16
151.03.40	6.16
151.04.00	6.16
151.04.40	6.16
152.03.00	6.16
152.03.40	6.16
152.04.00	6.16
152.04.40	6.16
153.03.00	6.17
153.03.40	6.17
153.04.00	6.17
153.04.40	6.17
154.03.00	6.17
154.03.40	6.17
154.04.00	6.17
154.04.40	6.17
160.04.00	6.24
164.04.00	10.06
164.04.10	10.06

Code Code APT. Cod Código Kode	Page Page CTP. Pagina Página Seite
164.04.20	10.06
165.04.50	6.24
170.08.00	7.12
171.05.00	7.08
171.05.60	7.08
171.06.00	7.08
171.06.60	7.08
172.05.00	7.08
172.05.60	7.08
172.06.00	7.08
172.06.60	7.08
173.00.00	7.12
175.04.00	6.26
177.00.00	6.25
177.00.10	6.25
178.04.00	10.12
178.05.00	10.12
178.06.00	10.12
179.03.00	6.03
179.04.00	6.03
18.01.02	4.08
18.02.02	4.08
18.02.52	4.08
18.03.02	4.08
18.03.52	4.08
180.03.00	6.03
180.04.00	6.03
181.00.20	7.09
181.00.30	7.09
182.00.00	7.09
183.00.00	7.09
185.00.00	7.09
185.00.10	7.09
185.00.20	7.09
186.00.00	7.09
1878.07.00	1.03
1878.07.10	1.03
1927.16.00	10.02
1927.20.00	10.02
1942.05.00	7.08
1942.06.00	7.08
1944.16.00	10.03
2078.03.00	6.04
2078.04.00	6.04
2079.03.00	6.04
2079.04.00	6.04
2080.03.00	6.05
2080.04.00	6.05
2081.03.00	6.05
2081.04.00	6.05
209.00.00	6.13
2098.05.00	4.06
2098.06.00	4.06
211.04.00	6.23
211.04.50	6.23
212.04.00	6.24
212.04.50	6.24
213.04.00	6.23
213.04.50	6.23
2133.04.00	5.11
2133.05.00	5.11
2133.06.00	5.11
2133.07.00	5.11
2133.08.00	5.11
2133.09.00	5.11
214.04.00	6.24
214.04.50	6.24
2151.005	6.13
216.05.60	4.02
216.06.60	4.02
216.07.60	4.02
217.12.00	10.07
217.15.00	10.07
217.15.10	10.07
217.16.00	10.07
217.16.10	10.07
217.17.00	10.07
217.18.00	10.07
217.20.00	10.07
217.20.10	10.07

Code Code APT. Cod Código Kode	Page Page CTP. Pagina Página Seite
217.21.00	10.07
219.06.00	7.03
219.07.00	7.03
22.04.00	6.20
22.04.20	6.20
22.04.90	6.22
22.05.00	6.20
22.05.30	6.20
220.05.00	1.06
220.06.00	1.06
2201.04.10	2.04
2201.04.40	2.04
2201.04.60	2.04
2201.04.70	2.04
2201.05.10	2.04
2201.05.40	2.04
2201.05.60	2.04
2201.05.70	2.04
2201.14.10	2.04
2201.14.40	2.04
2201.14.60	2.04
2201.14.70	2.04
2201.15.10	2.04
2201.15.40	2.04
2201.15.60	2.04
2201.15.70	2.04
222.05.00	10.08
222.05.10	10.08
223.04.00	6.22
223.04.50	6.22
224.14.00	10.08
224.16.00	10.08
224.16.10	10.08
224.16.20	10.08
224.17.00	10.08
224.18.00	10.08
224.20.00	10.08
224.20.10	10.08
224.20.20	10.08
224.20.30	10.08
225.04.00	6.22
225.04.50	6.22
2273.005	6.13
2274.005	6.13
2319.05.50	4.06
2319.06.50	4.06
2337.06.10	4.07
2337.07.10	4.07
2337.08.10	4.07
2337.09.10	4.07
2344.05.50	4.06
2344.06.50	4.06
2366.05.00	1.00
240.05.00	10.09
242.04.00	10.10
2441.005	10.12
246.00.00	10.07
247.05.00	7.13
248.04.00	7.10
248.04.10	7.10
248.04.20	7.10
249.04.00	6.23
249.04.50	6.23
25.05.00	6.20
25.05.10	6.20
25.05.50	6.20
25.06.00	6.20
25.06.10	6.20
25.06.50	6.20
2501.00.22	6.11
2502.00.12	8.01
2502.00.22	8.01
2502.00.32	8.01
2502.00.42	8.01
2503.00.02	8.01
2508.00.00	4.07
2516.04.00	5.03
2516.05.00	5.03
2516.06.00	5.03
2545.05.10	2.04

Code Code APT. Cod Código Kode	Page Page CTP. Pagina Página Seite
2545.05.30	2.04
2545.05.40	2.04
2545.05.60	2.04
2545.05.70	2.04
2545.15.10	2.04
2545.15.30	2.04
2545.15.40	2.04
2545.15.60	2.04
2545.15.70	2.04
26.00.00	7.10
2606.10.02	9.02
2606.40.02	9.02
2606.60.02	9.02
2606.80.02	9.02
263.12.20	10.07
263.15.20	10.07
2633.00.00	6.11
2640.03.90	6.09
2640.04.90	6.09
2641.03.90	6.09
2641.04.90	6.09
2642.03.90	6.09
2642.04.90	6.09
2643.03.90	6.10
2643.04.90	6.10
2649.05.00	4.03
2649.06.00	4.03
2673.00.00	7.07
2674.00.00	7.07
27.03.00	6.14
27.03.10	6.14
27.04.00	6.14
27.04.10	6.14
2718.04.00	5.08
2718.05.00	5.08
2718.06.00	5.08
2720.03.90	6.10
2720.04.90	6.10
28.03.00	6.14
28.03.10	6.14
28.04.00	6.14
28.04.10	6.14
2809.04.11	2.05
2809.04.60	2.05
2809.04.81	2.05
2809.04.90	2.05
2809.05.11	2.05
2809.05.60	2.05
2809.05.81	2.05
2809.05.90	2.05
2809.06.11	2.05
2809.06.60	2.05
2809.06.81	2.05
2809.06.90	2.05
2809.07.11	2.05
2809.07.60	2.05
2809.07.81	2.05
2809.07.90	2.05
2827.03.00	4.00
2828.03.00	4.00
2828.04.00	4.00
2829.04.00	4.04
2829.05.00	4.04
2829.06.00	4.04
2829.07.00	4.04
2829.08.00	4.04
2829.09.00	4.04
2830.04.00	4.03
2830.05.00	4.03
2830.06.00	4.03
2830.07.00	4.03
2830.08.00	4.03
2830.09.00	4.03
2831.04.00	4.04
2831.05.00	4.04
2831.06.00	4.04
2831.07.00	4.04
2835.00.02	6.12
2836.04.00	4.02
2840.03.00	4.01

Code Code APT. Cod Código Kode	Page Page CTP. Pagina Página Seite
2840.04.00	4.01
2847.10.00	4.08
2847.11.00	4.08
2847.13.00	4.08
2848.04.00	5.05
2848.05.00	5.05
2863.04.00	4.07
2863.05.00	4.07
2863.06.00	4.07
2863.07.00	4.07
2873.04.10	3.02
2873.04.20	3.02
2873.04.30	3.02
2873.04.40	3.02
2873.04.50	3.03
2873.04.60	3.03
2873.05.10	3.02
2873.05.20	3.02
2873.05.30	3.02
2873.05.40	3.02
2873.05.50	3.03
2873.05.60	3.03
2873.06.10	3.02
2873.06.20	3.02
2873.06.30	3.02
2873.06.40	3.02
2873.06.50	3.03
2873.06.60	3.03
2874.04.10	3.02
2874.04.20	3.02
2874.04.30	3.02
2874.04.40	3.02
2874.04.50	3.03
2874.04.60	3.03
2874.05.10	3.02
2874.05.20	3.02
2874.05.30	3.02
2874.05.40	3.02
2874.05.50	3.03
2874.05.60	3.03
2874.06.10	3.02
2874.06.20	3.02
2874.06.30	3.02
2874.06.40	3.02
2874.06.50	3.03
2874.06.60	3.03
2878.00.00	6.10
288.04.80	5.08
288.05.80	5.08
2881.00.02	3.04
2881.00.12	3.04
2881.00.22	3.04
2882.00.02	3.04
2882.00.12	3.04
2882.00.22	3.04
29.03.00	6.15
29.03.10	6.15
29.04.00	6.15
29.04.10	6.15
2909.04.00	5.05
2909.05.00	5.05
2909.06.00	5.05
2909.07.00	5.05
2909.08.00	5.05
2909.09.00	5.05
293.05.00	7.04
294.05.00	7.04
2944.00.02	8.04
2944.00.12	8.04
2944.00.42	8.04
2944.00.52	8.04
2944.004	10.10
2948.00.02	9.02
295.05.00	7.04
296.05.00	7.04
2961.00.02	3.03
2962.00.02	6.11
297.05.00	7.04
298.05.00	7.04
3.03.00	5.00

Code Code APT. Cod Código Kode	Page Page CTP. Pagina Página Seite
3.03.10	5.00
3.03.20	5.00
3.03.70	5.00
3.04.00	5.00
3.04.10	5.00
3.04.20	5.00
3.04.70	5.00
3.05.00	5.00
3.05.10	5.00
3.05.20	5.00
3.05.70	5.00
3.06.00	5.00
3.06.10	5.00
3.06.20	5.00
3.06.70	5.00
3.07.00	5.00
3.07.10	5.00
3.07.20	5.00
3.07.70	5.00
3.08.00	5.00
3.08.10	5.00
3.08.20	5.00
3.08.70	5.00
3.09.00	5.00
3.09.10	5.00
3.09.20	5.00
3.09.70	5.00
3.10.00	5.00
3.10.10	5.00
3.10.20	5.00
3.11.00	5.00
3.11.10	5.00
3.11.20	5.00
3.13.00	5.00
3.13.10	5.00
3.13.20	5.00
30.03.00	6.15
30.03.10	6.15
30.04.00	6.15
30.04.10	6.15
301.05.10	6.28
301.05.80	6.28
302.05.10	6.28
302.05.80	6.28
304.00.02	5.09
304.04.00	5.09
304.05.00	5.09
304.06.00	5.09
304.07.00	5.09
304.08.00	5.09
304.09.00	5.09
304.10.00	5.09
304.11.00	5.09
304.13.00	5.09
306.00.02	6.12
306.00.12	6.12
306.00.42	6.12
306.00.52	6.12
308.00.02	6.25
308.00.12	6.25
308.10.02	6.25
308.12.02	6.25
308.14.02	6.25
308.16.02	6.25
308.18.02	6.25
31.03.00	6.02
31.04.00	6.02
31.05.00	6.02
310.10.10	6.26
310.10.60	6.26
310.10.90	6.26
311.00.00	10.00
311.05.00	10.09
312.15.60	6.27
312.15.90	6.27
313.00.02	8.02
316.00.00	6.13
316.00.10	6.13
32.03.00	6.02
32.04.00	6.02

Code Code APT. Cod Código Kode	Page Page CTP. Pagina Página Seite
32.05.00	6.02
34.05.00	7.00
34.06.00	7.00
348.15.10	6.26
348.15.60	6.26
348.15.90	6.26
349.00.00	6.28
35.05.00	7.00
35.05.40	7.00
35.06.00	7.00
35.06.40	7.00
35.07.00	7.00
351.04.10	2.01
351.04.11	2.01
351.04.20	2.01
351.04.30	2.01
351.04.40	2.01
351.04.50	2.01
351.04.60	2.01
351.04.70	2.01
351.04.71	2.01
351.04.80	2.01
351.04.81	2.01
351.04.90	2.01
351.05.10	2.01
351.05.11	2.01
351.05.20	2.01
351.05.30	2.01
351.05.40	2.01
351.05.50	2.01
351.05.60	2.01
351.05.70	2.01
351.05.71	2.01
351.05.80	2.01
351.05.81	2.01
351.05.90	2.01
352.04.10	2.02
352.04.11	2.02
352.04.20	2.02
352.04.30	2.02
352.04.40	2.02
352.04.50	2.02
352.04.60	2.02
352.04.70	2.02
352.04.71	2.02
352.04.80	2.02
352.04.81	2.02
352.04.90	2.02
352.05.10	2.02
352.05.11	2.02
352.05.20	2.02
352.05.30	2.02
352.05.40	2.02
352.05.50	2.02
352.05.60	2.02
352.05.70	2.02
352.05.71	2.02
352.05.80	2.02
352.05.81	2.02
352.05.90	2.02
353.04.10	2.03
353.04.11	2.03
353.04.20	2.03
353.04.30	2.03
353.04.40	2.03
353.04.50	2.03
353.04.60	2.03
353.04.70	2.03
353.04.71	2.03
353.04.80	2.03
353.04.81	2.03
353.04.90	2.03
353.05.10	2.03
353.05.11	2.03
353.05.20	2.03
353.05.30	2.03
353.05.40	2.03
353.05.50	2.03
353.05.60	2.03
353.05.70	2.03

Code Code APT. Cod Código Kode	Page Page CTP. Pagina Página Seite
353.05.71	2.03
353.05.80	2.03
353.05.81	2.03
353.05.90	2.03
354.04.10	2.03
354.04.11	2.03
354.04.20	2.03
354.04.30	2.03
354.04.40	2.03
354.04.50	2.03
354.04.60	2.03
354.04.70	2.03
354.04.71	2.03
354.04.80	2.03
354.04.81	2.03
354.04.90	2.03
36.05.00	7.00
36.05.40	7.00
36.06.00	7.00
36.06.40	7.00
36.07.00	7.00
360.00.10	8.02
360.00.20	8.02
360.00.30	8.02
360.00.40	8.02
361.10.00	10.07
361.12.00	10.07
361.14.00	10.07
361.15.00	10.07
361.16.00	10.07
361.18.00	10.07
362.35.00	9.00
362.50.00	9.00
37.03.60	4.01
37.04.60	4.01
37.05.60	4.01
37.05.70	4.03
37.06.60	4.01
373.00.50	8.01
373.00.60	8.01
38.03.70	4.01
38.04.10	4.01
38.04.70	4.01
39.04.00	1.05
39.04.30	1.05
39.05.30	1.05
395.03.00	6.03
395.04.00	6.03
4.04.00	5.01
4.04.10	5.01
4.04.20	5.01
4.04.70	5.01
4.05.00	5.01
4.05.10	5.01
4.05.20	5.01
4.05.70	5.01
4.06.00	5.01
4.06.10	5.01
4.06.20	5.01
4.06.70	5.01
4.07.00	5.01
4.07.10	5.01
4.07.20	5.01
4.07.70	5.01
4.08.00	5.01
4.08.10	5.01
4.08.20	5.01
4.08.70	5.01
4.09.00	5.01
4.09.10	5.01
4.09.20	5.01
4.09.70	5.01
41.10.20	10.00
41.12.20	10.00
41.14.20	10.00
41.15.20	10.00
41.16.20	10.00
41.18.40	10.00
42.00.00	10.09
42.05.00	10.11

Code Code APT. Cod Código Kode	Page Page CTP. Pagina Página Seite
42.05.30	10.11
42.06.00	10.11
42.06.30	10.11
424.04.70	6.21
424.04.90	6.21
426.06.00	7.04
427.06.00	7.04
428.06.00	7.04
43.03.00	10.10
43.04.00	10.10
43.05.00	10.11
43.06.00	10.11
433.05.00	7.01
433.06.00	7.01
434.05.00	7.01
434.06.00	7.01
435.05.00	7.01
435.06.00	7.01
45.05.00	10.11
45.06.00	10.11
46.04.00	1.05
47.06.10	1.02
47.06.40	1.03
48.03.00	6.02
48.04.00	6.02
49.03.00	6.03
49.04.00	6.03
5.03.10	10.04
5.03.1B	10.04
5.04.10	10.04
5.04.1B	10.04
5.05.10	10.04
5.05.1B	10.04
5.06.10	10.04
5.06.1B	10.04
5.07.10	10.04
5.07.1B	10.04
5.08.10	10.04
5.08.1B	10.04
5.09.10	10.04
5.09.1B	10.04
51.04.10	5.04
51.04.70	5.03
51.05.10	5.04
51.05.70	5.03
51.06.10	5.04
51.06.70	5.03
51.07.10	5.04
51.07.70	5.03
51.08.10	5.04
51.08.70	5.03
51.09.10	5.04
51.09.70	5.03
51.10.10	5.03
51.10.70	5.03
51.11.10	5.03
51.11.70	5.03
51.13.10	5.03
51.13.70	5.03
52.05.00	7.01
52.05.20	7.01
52.06.00	7.01
52.06.20	7.01
53.05.00	7.01
53.06.00	7.01
54.05.00	7.01
54.06.00	7.01
55.05.00	7.01
55.06.00	7.01
556.00.00	7.13
56.05.00	10.12
56.05.30	10.12
56.06.00	10.12
56.06.30	10.12
56.07.00	10.12
564.03.00	6.19
564.03.40	6.19
564.04.00	6.19
564.04.40	6.19
565.03.00	6.19

100% MADE IN ITALY

INDEX CODE - PAGE

Code Code APT. Cod Código Kode	Page Page CTP. Pagina Página Seite
565.03.40	6.19
565.04.00	6.19
565.04.40	6.19
57.05.00	10.12
57.06.00	10.12
57.16.00	10.10
57.18.00	10.10
578.05.00	1.02
578.05.40	1.02
58.03.00	10.04
58.04.00	10.04
58.05.00	10.04
58.06.00	10.04
58.07.00	10.04
58.08.00	10.04
58.09.00	10.04
583.07.00	5.03
585.04.00	6.20
585.04.10	6.20
585.05.00	6.20
585.05.10	6.20
586.00.00	10.14
587.03.00	6.18
587.03.40	6.18
587.04.00	6.18
587.04.40	6.18
588.03.00	6.18
588.03.40	6.18
588.04.00	6.18
588.04.40	6.18
59.05.00	7.01
59.06.00	7.01
590.00.00	6.11
590.00.10	6.11
597.00.00	10.11
6.03.10	10.05
6.04.10	10.05
6.05.10	10.05
6.06.10	10.05
6.07.10	10.05
6.08.10	10.05
6.09.10	10.05
60.05.00	7.01
60.06.00	7.01
602.10.00	10.01
602.12.00	10.01
602.14.00	10.01
602.15.00	10.01
602.16.00	10.01
605.04.00	2.00
605.04.10	2.00
605.04.20	2.00
605.04.30	2.00
605.04.40	2.00
605.04.50	2.00
605.04.60	2.00
605.04.70	2.00
605.04.80	2.00
605.04.90	2.00
605.05.00	2.00
605.05.10	2.00
605.05.20	2.00
605.05.30	2.00
605.05.40	2.00
605.05.50	2.00
605.05.60	2.00
605.05.70	2.00
605.05.80	2.00
605.05.90	2.00
605.06.00	2.00
605.06.10	2.00
605.06.20	2.00
605.06.30	2.00
605.06.40	2.00
605.06.50	2.00
605.06.60	2.00
605.06.70	2.00
605.06.80	2.00
605.06.90	2.00
605.07.00	2.00

Code Code APT. Cod Código Kode	Page Page CTP. Pagina Página Seite
605.07.10	2.00
605.07.20	2.00
605.07.30	2.00
605.07.40	2.00
605.07.50	2.00
605.07.60	2.00
605.07.70	2.00
605.07.80	2.00
605.07.90	2.00
608.06.60	7.14
608.26.60	7.14
609.06.60	7.14
61.05.00	7.01
61.06.00	7.01
610.06.60	7.14
611.06.60	7.14
612.06.60	7.14
613.06.60	7.14
614.06.60	7.14
615.06.60	7.14
616.06.60	7.14
616.12.60	7.14
616.13.60	7.14
617.06.10	1.04
617.07.10	1.04
617.08.10	1.04
617.09.10	1.04
617.09.70	1.04
617.10.70	1.04
617.11.70	1.04
617.13.70	1.04
617.14.70	1.04
617.15.70	1.04
619.03.50	3.00
619.04.50	3.00
619.05.50	3.00
619.06.50	3.00
619.07.50	3.00
619.08.50	3.00
619.09.50	3.00
619.10.60	3.00
619.11.60	3.00
619.13.60	3.00
619.14.60	3.00
619.15.60	3.00
619.17.60	3.00
619.19.60	3.00
619.21.60	3.00
62.05.00	7.01
62.06.00	7.01
620.04.50	3.01
620.04.90	3.01
620.05.50	3.01
620.06.50	3.01
620.07.50	3.01
620.08.50	3.01
620.09.50	3.01
620.10.00	3.01
620.11.00	3.01
620.13.00	3.01
620.14.00	3.01
620.15.00	3.01
620.17.00	3.01
620.19.00	3.01
620.21.00	3.01
621.01.50	3.05
622.00.00	3.05
63.05.00	7.00
63.05.20	7.00
63.06.00	7.00
63.06.20	7.00
64.05.00	7.00
64.05.20	7.00
64.06.00	7.00
64.06.20	7.00
65.05.00	7.00
65.06.00	7.00
659.04.00	1.03
66.06.00	7.00
666.05.00	2.01

Code Code APT. Cod Código Kode	Page Page CTP. Pagina Página Seite
666.06.00	2.01
666.07.00	2.01
666.08.00	2.01
69.00.00	10.00
7.03.00	6.14
7.04.00	6.14
7.05.00	6.14
7.06.00	6.14
7.07.00	6.14
70.12.90	10.02
70.14.00	10.02
70.14.90	10.02
70.16.00	10.02
70.16.10	10.02
70.16.20	10.02
70.16.30	10.02
70.16.90	10.02
70.17.10	10.02
70.17.30	10.02
70.17.40	10.02
70.18.00	10.02
70.20.00	10.02
70.20.10	10.02
70.20.20	10.02
70.20.30	10.02
700.14.00	6.25
71.10.20	10.01
71.10.30	10.01
71.12.00	10.01
71.12.20	10.01
71.14.00	10.01
71.15.00	10.01
71.15.10	10.01
71.16.00	10.01
71.16.20	10.01
71.16.30	10.01
71.16.40	10.01
71.17.00	10.01
71.18.00	10.01
71.18.30	10.01
71.20.10	10.01
71.20.40	10.01
72.04.00	10.05
72.05.00	10.05
72.06.00	10.05
72.06.50	10.05
72.07.00	10.05
72.08.00	10.05
72.09.00	10.05
720.00.30	6.11
735.12.00	10.13
735.16.00	10.13
735.16.10	10.13
735.16.20	10.13
736.05.20	8.03
736.06.20	8.03
754.04.00	6.21
791.03.40	4.00
791.04.40	4.00
8.03.00	6.14
8.04.00	6.14
8.05.00	6.14
8.06.00	6.14
8.07.00	6.14
805.00.00	7.11
81.00.00	10.06
811.14.30	2.06
811.14.40	2.06
811.15.30	2.06
811.15.40	2.06
811.16.30	2.06
811.16.40	2.06
811.17.30	2.06
811.17.40	2.06
813.05.20	8.03
813.06.20	8.03
814.05.20	8.03
814.06.20	8.03
826.14.00	10.03
826.16.00	10.03

Code Code APT. Cod Código Kode	Page Page CTP. Pagina Página Seite
826.18.00	10.03
826.20.00	10.03
828.00.00	1.02
83.03.00	10.06
83.04.00	10.06
85.35.00	9.00
85.40.00	9.00
85.50.00	9.00
85.58.00	9.00
85.75.00	9.00
858.04.02	5.02
858.04.12	5.02
858.04.72	5.02
858.05.02	5.02
858.05.12	5.02
858.05.72	5.02
858.06.02	5.02
858.06.12	5.02
858.06.72	5.02
858.07.02	5.02
858.07.12	5.02
858.07.72	5.02
858.08.02	5.02
858.08.12	5.02
858.08.72	5.02
858.09.02	5.02
858.09.12	5.02
858.09.72	5.02
86.35.00	9.00
86.40.00	9.00
86.50.00	9.00
86.58.00	9.00
86.75.00	9.00
866.06.00	7.02
866.06.20	7.02
866.06.30	7.02
87.03.10	5.06
87.03.60	5.07
87.03.70	5.07
87.03.80	5.06
87.04.10	5.06
87.04.20	5.07
87.04.60	5.07
87.04.70	5.07
87.04.80	5.06
87.05.10	5.06
87.05.20	5.07
87.05.60	5.07
87.05.70	5.07
87.05.80	5.06
87.06.20	5.07
87.06.60	5.07
87.06.70	5.07
87.07.20	5.07
87.07.60	5.07
87.07.70	5.07
87.08.20	5.07
87.08.60	5.07
87.08.70	5.07
87.09.20	5.07
87.09.60	5.07
87.09.70	5.07
895.06.00	7.02
895.06.10	7.02
895.06.20	7.02
899.00.00	9.02
9.03.00	6.15
9.04.00	6.15
9.05.00	6.15
9.06.00	6.15
9.07.00	6.15
90.08.00	7.12
903.00.50	7.06
903.00.60	7.06
903.00.70	7.06
91.08.00	7.12
92.05.00	10.09
92.08.00	7.12
932.01.00	3.05
95.08.00	7.11

Code Code APT. Cod Código Kode	Page Page CTP. Pagina Página Seite
963.16.30	10.08
963.18.30	10.08
963.20.30	10.08
963.26.30	10.08
967.00.00	7.05
967.00.10	7.05
967.00.20	7.05
97.05.00	10.05
97.06.00	10.05

COMPONENTS FOR BOILER ROOMS

COMPOSANTS POUR CENTRALES THERMIQUES

КОМПОНЕНТЫ ДЛЯ КОТЕЛЬНЫХ

COMPONENTE PENTRU CENTRALE TERMICE

COMPONENTES PARA CENTRALES TÉRMICAS

BAUTEILE FÜR HEIZZENTRALEN

STOP LEAK
water leak detector

Safety unit

Hydraulic
separators

Accessories
- filling units

Differential pressure
By-pass valves

"STOP LEAK" WATER LEAK DETECTOR

057

2366

Water leak detector.

Device capable of intervening on system in case of sudden breakage of pipes, cutting power and thus avoiding flooding.

The Stop Leak system is composed of:
Motorised shut-off valve;
Flow sensor;
Electronic sensor;
Remote display.

- Sensitivity: 0.2 l/h
- Reaction time: programmable
- Temperature Range: -20°C ÷ 80°C
- Protection: IP68 (sensor)
- Maximum distance of cable between sensor and control unit: 300m
- Power supply: 24V DC

Stop Leak water leak detector
Dispositif anti-fuites Stop Leak
Устройство против течек Stop Leak
Dispozitiv antipierderi Stop Leak
Dispositivo anti-fugas de agua Stop Leak
Vorrichtung gegen Lecks Stop Leak

Code Code Артикул Cod Código Code	Size Taille Размер Dimensiune Medida Abmessung	EURO EURO EURO EURO EURO EURO	Pack Cond. Уп-ка Ambalaj Caja Verp.
2366.05.00	3/4"	-	1

Patent nr 277370

- **Protects your system from breakage and or leaks**
- **Prevention of damage caused by water leakage**
- **Avoids disputes ensuing leakage problems**
- **Saves on consumption**
- **Advantages for all (saves water resources)**
- **Possibility of negotiating home insuranc**

For further information please visit our website:
www.stopleak.it

WITH STOP LEAK YOUR PROPERTY IS SAFER

Stop Leak is the result of the latest technology for **water leakage detectors**. Stop Leak is the only system available on the market that is able to detect leaks on a hydraulic system in the order of 0.2 l/h, a little less than a standard glass.

STOP LEAK AVOIDS SERIOUS DAMAGES SHUTTING DOWN WATER SUPPLY.

WATER IS PRECIOUS

By avoiding waste or flooding, the system is an efficient solution to optimize use of water, **promoting a responsible management of this precious resource**.

100% MADE IN ITALY

578

Safety unit for boiler rooms, preassembled.

Composed of:
Galvanised steel bent stub pipe complete with connections and fixing bracket
Automatic air venting valve
Standard safety relief valve with controlled rise with drain F G1/2".
Dial pressure gauge with radial connection.
Double check valve 3/4" with F connection on expansion vessel.

- Valve pressure setting 300 KPa
- Max temperature 90 °C
- Pressure gauge scale 0…400 KPa
- Orifice diameter v.s. 15mm
- Max discharge 62Kw

■ Technical drawing, page 11.00

Safety unit for boiler rooms, preassembled
Groupe de sécurité pour centrale thermique pré-assemblé
Группа безопасности в сборе
Grup de siguranță pentru centrală termică pre-asamblată
Grupo de seguridad para centrales térmicas
Baugruppe Sicherheitsvorrichtungen vorzusammengesetzte Heizzentrale

Code Code Артикул Cod Código Code	Size Taille Размер Dimensiune Medida Abmessung	EURO EURO EURO EURO EURO EURO	Pack Cond. Уп-ка Ambalaj Caja Verp.
578.05.00	3/4"	-	1

Note: Standard safety relief valve code 352.04.40 compliant with directives PED 97/23/EC IV - EC 1115

002

578

Safety unit for boiler rooms, preassembled.

Composed of:
Galvanised steel bent stub pipe complete with connections and fixing bracket
Automatic air venting valve
Standard safety relief valve with controlled rise with drain F G1/2".
Dial pressure gauge with radial connection.
Double check valve 3/4" with F connection on expansion vessel.

- Valve pressure setting 300 KPa
- Max temperature 90 °C
- Pressure gauge scale 0…400 KPa
- Orifice diameter v.s. 15mm
- Max discharge 62Kw

Safety unit for boiler rooms, preassembled
Groupe de sécurité pour centrale thermique pré-assemblé
Предохранительный модуль для системы отопления в сборе
Grup de siguranță pentru centrala termica preasamblat
Grupo de seguridad para central térmica preensamblado
Baugruppe Sicherheitsvorrichtungen vorzusammengesetzte Heizzentrale

Code Code Артикул Cod Código Code	Size Taille Размер Dimensiune Medida Abmessung	EURO EURO EURO EURO EURO EURO	Pack Cond. Уп-ка Ambalaj Caja Verp.
578.05.40	3/4"	-	1

Note: Standard safety relief valve comply with directive PED 97/23/EC IV - D.lgs 25.02.2000 n°93

New

002

47

Insulated safety unit.

Composed of:
Automatic air venting valve + check valve.
Standard safety relief valve with controlled rise with drain F G 1/2".
Dial pressure gauge with radial connection + check valve.

- Valve pressure setting 300 KPa
- Max temperature 90 °C
- Pressure gauge scale 0…600 KPa
- Orifice diameter v.s. 15mm
- Shell fire resistance Class 1
- Max discharge 62Kw

■ Technical drawing, page 11.00

Kombiluft safety unit
Groupe de sécurité Kombiluft
Группа безопасности Kombiluft
Grup de siguranță kombiluft
Grupo de seguridad Kombiluft para grupo térmico
Baugruppe Sicherheitsvorrichtungen kombiluft

Code Code Артикул Cod Código Code	Size Taille Размер Dimensiune Medida Abmessung	EURO EURO EURO EURO EURO EURO	Pack Cond. Уп-ка Ambalaj Caja Verp.
47.06.10	1"	-	1

Note: Standard safety relief valve code 352.04.40 compliant with directives PED 97/23/EC IV - EC 1115

Kombiluft thermal shell
Coque isolante pour Kombiluft
Теплоизолирующий кожух для Kombiluft
Carcasă termică pentru kombiluft
Aislante térmico para grupo de seguridad Kombiluft
Thermoschale für Kombiluft

Code Code Артикул Cod Código Code	EURO EURO EURO EURO EURO EURO	Pack Cond. Уп-ка Ambalaj Caja Verp.
828.00.00	-	1

Thermal shell sold separately.

002

100% MADE IN ITALY

47

Safety unit with degasser composed of:
- Automatic air venting valve with channelled drain.
- Standard safety relief valve with controlled rise.
- Dial pressure gauge with radial connection.

Nickel plated brass body.
Plastic polymer float.
Stainless steel AISI 302 spring.
Seals in EPDM and NBR.
Obturator seal V.S. in EPDM.
Diaphragm V.S. in EPDM.
Threaded connections F UNI-EN-ISO 228.
Channelled air discharge F G1/2".
Safety relief valve discharge F G3/4".

- Valve pressure setting 300 KPa
- Max temperature 90 °C
- Water drain flow rate 1150 l/h
- Pressure gauge scale 0…400 KPa
- Orifice diameter v.s. 15mm
- Max discharge 62Kw

■ Technical drawing, page 11.00

Vasaotto safety unit
Groupe de sécurité Vasaotto
Группа безопасности Vasaotto
Grup de siguranţă Vasaotto
Grupo de seguridad Vasaotto para grupo térmico
Baugruppe Sicherheitsvorrichtungen Vasaotto

Code Code Артикул Cod Código Code	Size Taille Размер Dimensiune Medida Abmessung	Model Modèle Модель Model Modelo Modell	EURO EURO EURO EURO EURO EURO	Pack Cond. Уп-ка Ambalaj Caja Verp.
47.06.40	1"	Vasaotto	-	1

Note: Standard safety relief valve comply with directive PED 97/23/EC IV - D.lgs 25.02.2000 n°93

CE 1115

1878

Galvanised steel manifold G 2" MM (union connections).

Connections for accessories (purchased separately):
Pressure gauge cock 3/8"
Radial connection pressure gauge 3/8"
Immersion safety thermostat
Safety pressure switch 1/4" with manual reset
Safety pressure switch 1/4" with automatic reset
Approved certified safety relief valve 3/4" x 1"
Thermometer Ø 80 - L 50 radial connection with probe holder G 1/2"
Control probe holder INAIL ex I.S.P.E.S.L. G1/2" (2 pieces)

- Valve pressure setting 300 KPa (not included)
- Max temperature 110°C

- INAIL ex I.S.P.E.S.L.

INAIL

Galvanised steel manifold
Collecteur en acier zingué
Коллектор из оцинкованной стали
Colector din oţel zincat
Colector para dispositivos de control y seguridad, en acero zincado
Sammler aus verzinktem Stahl

Code Code Артикул Cod Código Code	Size Taille Размер Dimensiune Medida Abmessung	EURO EURO EURO EURO EURO EURO	Pack Cond. Уп-ка Ambalaj Caja Verp.
1878.07.00*	2"	-	1
1878.07.10**	2"	-	1

*Single pressure switch
**Double pressure switch
Note: Certified safety relief valve code 605.05.30 compliant with Directives PED 97/23/EC IV - EC 1115 (not included)

Accessories not included, purchased separately.

659

Button operated pressure gauge cock for gaseous fluids.

Nickel plated brass body.
NBR seals.
Threaded connections FF UNI-EN-ISO 228.

- Max fluid temperature -10 ÷ 80 °C
- Nominal pressure PN4

Button operated gas isolation valve
Dispositif de coupure à bouton pour gaz
Кран кнопочный для подключения манометра на газ
Eliminator cu buton pentru gaz
Portamanometros pulsante para gas
Ausscheider mit Taste für Gas

Code Code Артикул Cod Código Code	Size Taille Размер Dimensiune Medida Abmessung	EURO EURO EURO EURO EURO EURO	Pack Cond. Уп-ка Ambalaj Caja Verp.
659.04.00	1/2"	-	4

100% MADE IN ITALY

617

Threaded, pre-dimensioned hydraulic separator.

Steel body painted with epoxy powders.
Valves and degasser are made of copper.
PTFE ball valves seals.
Degasser seals in EPDM and NBR.
Threaded connections and F UNI-EN-ISO 228 filling unit.
Front coupling for 1/2" F UNI-EN-ISO 228 devices.

- Max operating pressure
  Separator body 1000 kPa
  Ball valve 2500 kPa
  Degasser 1000 kPa
- Allowed temperatures
  Degasser 0...115 °C
  Ball valve -15...120 °C

Threaded hydraulic separator
Séparateur hydraulique fileté
Гидравлический резьбовой сепаратор
Separator hidraulic filetat
Separador hidráulico, conexiones roscadas
Hydraulischer Abscheider mit Gewinde

Code Code Артикул Cod Código Code	Size Taille Размер Dimensiune Medida Abmessung	Flow rate (l/h) Débit (l/h) Расход (л/ч) Debit (m^3/h) Caudal (l/h) Durchflussmenge (l/h)	EURO EURO EURO EURO EURO EURO	Pack Cond. Уп-ка Ambalaj Caja Verp.
617.06.10	1"	2.500	-	1
617.07.10	1"1/4	4.000	-	1
617.08.10	1"1/2	6.000	-	1
617.09.10	2"	8.500	-	1

Supplied complete with MEGALUFT degasser, automatic shut off check valve on degasser, ball valve to discharge bottom and mud drainage and thermal insulation.

Coupled supply hydraulic separator and thermal insulation shell.

617

Flanged, pre-dimensioned hydraulic separator.

Steel body painted with epoxy powders.
Valves and degasser are made of nickel brass.
PTFE ball valves seals.
Degasser seals in EPDM and NBR.
Flanged connections
Connection for 1/2" F UNI-EN-ISO 228 devices

- Max operating pressure
  Separator body 1000 kPa
  Ball valve 2500 kPa
  Degasser 600 kPa
- Allowed temperatures
  Degasser 0...100 °C
  Ball valve -15...120 °C

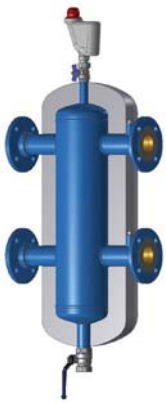

Flanged hydraulic separator
Séparateur hydraulique à bride
Фланцевый дренажный сепаратор
Separator hidraulic prevăzut cu flanșă.
Separador hidráulico, conexiones embridadas
Hydraulischer Abscheider mit Flansch

Code Code Артикул Cod Código Code	Size Taille Размер Dimensiune Medida Abmessung	Flow rate (l/h) Débit (l/h) Расход (л/ч) Debit (m^3/h) Caudal (l/h) Durchflussmenge (l/h)	EURO EURO EURO EURO EURO EURO	Pack Cond. Уп-ка Ambalaj Caja Verp.
617.09.70	DN50	9.000	-	1
617.10.70	DN65	18.000	-	1
617.11.70	DN80	28.000	-	1
617.13.70	DN100	56.000	-	1
617.14.70	DN125	75.000	-	1
617.15.70	DN150	110.000	-	1

Supplied complete with large capacity VASASETTE degasser, ball valve to discharge bottom, mud drainage and thermal insulation.

Coupled supply hydraulic separator and thermal insulation shell.

100% MADE IN ITALY

46

Automatic adjustable filling unit to top-up closed circuits, diaphragm operated with anti-water hammer action, complete with removable cartridge micro filter, built-in check valve and dial pressure gauge to view downstream pressure.

Nickel plated brass body
Stainless steel seal seats
Seals in nitrile elastomer
Threaded connections FF UNI-EN-ISO 228

- Max upstream pressure 2500 kPa
- Adjustable downstream pressure 80÷550 kPa
- Max operating temperature 80 °C
- Pressure gauge scale 0÷1000 kPa
- Filtering grade 800 µm

■ Technical drawing, page 11.00

Alinox filling unit - pn 25
Groupe de remplissage Alinox - pn 25
Подпиточный клапан Alinox - PN 25
Grup de reumplere Alinox - pn 25
Alimentador automático regulable Alinox, funcionamiento a membrana, con filtro extraíble
Füllgruppe Alinox - pn 25

Code Code Артикул Cod Código Code	Size Taille Размер Dimensiune Medida Abmessung	Model Modèle Модель Model Modelo Modell	EURO EURO EURO EURO EURO EURO	Pack Cond. Уп-ка Ambalaj Caja Verp.
46.04.00	1/2"	Alinox	-	1

Anti-water hammer action with built-in filter and check valve.

Outlet regulation 0.8÷5.5 Bar (with inlet pressure of 8 bar).

020

39

Automatic adjustable filling unit to top-up closed circuits, piston operated, complete with built-in check valve and dial pressure gauge to view downstream pressure.

Nickel plated brass body
Stainless steel seal seats
Seals in NBR
Threaded connections MF UNI-EN-ISO 228

- Max upstream pressure 2500 kPa
- Adjustable downstream pressure 50÷400 kPa
- Max operating temperature 80 °C
- Pressure gauge scale 0÷600 kPa

■ Technical drawing, page 11.01

Filler filling unit - pn 25
Groupe de remplissage Filler - pn 25
Подпиточная группа Filler - PN 25
Grup de reumplere Filler - pn 25
Alimentador automático regulable Filler, funcionamiento a pistón
Füllgruppe Filler - pn 25

Code Code Артикул Cod Código Code	Size Taille Размер Dimensiune Medida Abmessung	Model Modèle Модель Model Modelo Modell	EURO EURO EURO EURO EURO EURO	Pack Cond. Уп-ка Ambalaj Caja Verp.
39.04.00	1/2"	Filler	-	1

Outlet regulation 0.5÷4 Bar (with inlet pressure of 8 bar).

With built-in check valve and shut-off unit.

Regulation springs containment cap in polymer.

020

39

Automatic adjustable filling unit to top-up closed circuits, piston operated, complete with built-in check valve and dial pressure gauge to view downstream pressure.

Nickel plated brass body
Stainless steel seal seats
Seals in NBR
Threaded connections MF UNI-EN-ISO 228

- Max upstream pressure 2500 kPa
- Adjustable downstream pressure 50÷400 kPa
- Max operating temperature 80°C
- Pressure gauge scale 0÷1000 kPa

SmartFiller Filling unit piston based system - pn25 with adjustment knob
SmartFiller Groupe de remplissage fonctionnement à piston - pn 25 avec manette d'étalonnage
SmartFiller Подпиточный клапан поршневого действия - PN 25 с калибровочной рукояткой
SmartFiller Grup de umplere cu funcționare cu piston - pn 25 cu buton rotativ de calibrare
SmartFiller Grupo de llenado funcionamiento con pistón - pn 25 con manivela de calibración
SmartFiller Fülleinheit mit Kolbenbetrieb - pn 25 mit Regler

Code Code Артикул Cod Código Code	Size Taille Размер Dimensiune Medida Abmessung	Model Modèle Модель Model Modelo Modell	EURO EURO EURO EURO EURO EURO	Pack Cond. Уп-ка Ambalaj Caja Verp.
39.04.30	1/2"	SmartFiller	-	1
39.05.30	3/4"	SmartFiller	-	1

New

Outlet regulation 0.5÷4 Bar (with inlet pressure of 8 bar).

With built-in check valve and shut-off unit

Regulation springs containment cap in polymer

020

100% MADE IN ITALY

220

Settable 4-way bypass valve for total or partial overflow of thermal circuits.
Can be coupled to Monoblock coplanar manifolds.

Nickel plated brass body.
Ethylene-propylene seals.
Stainless steel AISI 302 springs.
ABS protective and manoeuvre cap.
Threaded in-line connections FF UNI-EN-ISO 228.
Centre distance 50...55 mm.

- Max temperature 110°C
- Max operating pressure 1000 kPa
- Bypass setting range 10...40 kPa

■ Technical drawing, page 11.01

4-way differential pressure bypass valve
Vanne de by-pass à pression différentielle à 4 voies
Четырёхходовой байпасный клапан дифференциального давления
Supapă de by-pass cu presiune diferențială cu 4 canale
Válvula de presión diferencia a 4 vías para colector coplanar Monoblock
Nebenleitungsventil mit Differentialdruck mit 4 Wege

Code Code Артикул Cod Código Code	Size Taille Размер Dimensiune Medida Abmessung	EURO EURO EURO EURO EURO EURO	Pack Cond. Уп-ка Ambalaj Caja Verp.
220.05.00	3/4"	-	1
220.06.00	1"	-	1

Installable on coplanar manifolds.
Adjustable centre distance 50...55 mm.

124

Settable bypass valve for total or partial overflow of thermal circuits.

Brass body.
Ethylene-propylene seals.
Stainless steel AISI 302 springs.
Shockproof ABS handwheel.
Graduated scale on knob.
Threaded in-line connections UNI-EN-ISO 228 (3/4" - 1" - 1"1/4).
Connections for fittings with copper pipe (Ø 22).

- Max temperature 110°C
- Max operating pressure 1000 kPa
- Setting range 10...70 kPa
- Setting unit 0.1 bar (10 kPa)

■ Technical drawing, page 11.01

Angle differential pressure bypass valves
Vanne de by-pass à pression différentielle en angle
Угловой байпасный клапан дифференциального давления
Supapă de by-pass cu presiune diferențială cu cot
Válvula de presión diferencial regulable, escuadra, M-H
Nebenleitungsventile mit Differentialdruck Winkel

Code Code Артикул Cod Código Code	Size Taille Размер Dimensiune Medida Abmessung	EURO EURO EURO EURO EURO EURO	Pack Cond. Уп-ка Ambalaj Caja Verp.
124.05.00*	3/4"	-	1
124.06.00*	1"	-	1
124.07.00*	1"1/4	-	1
124.22.00**	Ø 22	-	1

*Connections for steel pipe with union fitting
**Connections complete with fittings for copper pipe ø 22

100% MADE IN ITALY

CERTIFIED SAFETY RELIEF VALVES

VANNES DE SÉCURITÉ

ПРЕДОХРАНИТЕЛЬНЫЕ КЛАПАНЫ

SUPAPE DE SIGURANȚĂ

VÁLVULAS DE SEGURIDAD

SICHERHEITSVENTILE

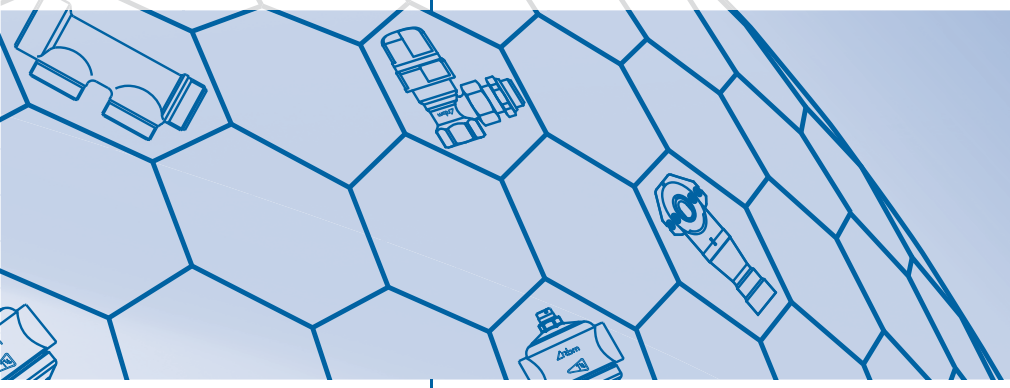

Certified safety relief valves

Standard safety relief valves

605

Calibrated and certified safety relief valve with controlled rise for fluids and neutral gases.

Brass body.
Galvanised steel spring.
Obturator seal in EPDM.
Diaphragm in EPDM.
Threaded angle connections FF UNI-EN-ISO 228.
Pressure setting certification at INAIL ex I.S.P.E.S.L. base.

- Max temperature 110°C
- Opening overpressure +10 %
- Closing discard pressure -20 %
- Nominal pressure PN 10
- Water-air usable fluid (Gr.2)

■ Technical drawing, page 11.01

- INAIL ex I.S.P.E.S.L.
- P.E.D. 97/23/CE IV
- D. Lgs 25.02.2000 n°93

CE 1115 INAIL

001

Certified safety relief valve 1/2"x 3/4"female connection

Soupape de sécurité qualifiée raccord femelle 1/2" x 3/4"
Предохранительный клапан, внутренняя резьба 1/2" x 3/4"
Supapă de siguranţă calificată prindere tip mamă 1/2" x 3/4"
Válvula de seguridad cualificada 1/2"H x 3/4"H
Geprüftes Sicherheitsventil Aufsteckanschluss 1/2" x 3/4"

Code Code Артикул Cod Código Code	Pressure setting (bar) Étalonnage (bar) Настройка (Бар) Calibrare (bar) Tarado (bar) Kalibrierung (bar)	Max Pow. (kW) Puiss. Max (kW) Макс. мощ-ть (кВт) Putere Maximă (kW) Pot. Máx (kW) Leist. Max (kW)	EURO EURO EURO EURO EURO EURO	Pack Cond. Уп-ка Ambalaj Caja Verp.
605.04.00	2,25	101	-	1
605.04.10	2,50	108	-	1
605.04.20	2,70	114	-	1
605.04.30	3,00	124	-	1
605.04.40	3,50	138	-	1
605.04.50	4,00	156	-	1
605.04.60	4,50	167	-	1
605.04.70	5,00	184	-	1
605.04.80	5,40	197	-	1
605.04.90	6,00	217	-	1

Certified safety relief valve 3/4"x 1"female connection

Soupape de sécurité qualifiée raccord femelle 3/4" x 1"
Предохранительный клапан, внутренняя резьба 3/4" x 1"
Supapă de siguranţă calificată prindere tip mamă 3/4" x 1"
Válvula de seguridad cualificada 3/4"H x 1"H
Geprüftes Sicherheitsventil Aufsteckanschluss 3/4" x 1"

Code Code Артикул Cod Código Code	Pressure setting (bar) Étalonnage (bar) Настройка (Бар) Calibrare (bar) Tarado (bar) Kalibrierung (bar)	Max Pow. (kW) Puiss. Max (kW) Макс. мощ-ть (кВт) Putere Maximă (kW) Pot. Máx (kW) Leist. Max (kW)	EURO EURO EURO EURO EURO EURO	Pack Cond. Уп-ка Ambalaj Caja Verp.
605.05.00	2,25	195	-	1
605.05.10	2,50	209	-	1
605.05.20	2,70	220	-	1
605.05.30	3,00	239	-	1
605.05.40	3,50	266	-	1
605.05.50	4,00	300	-	1
605.05.60	4,50	323	-	1
605.05.70	5,00	355	-	1
605.05.80	5,40	380	-	1
605.05.90	6,00	418	-	1

Certified safety relief valve 1"x 1"1/4 female connection

Soupape de sécurité qualifiée raccord femelle 1" x 1"1/4
Предохранительный клапан, внутренняя резьба 1" x 1"1/4
Supapă de siguranţă calificată prindere tip mamă 1" x 1"1/4
Válvula de seguridad cualificada 1"H x 1"1/4H
Geprüftes Sicherheitsventil Aufsteckanschluss 1" x 1"1/4

Code Code Артикул Cod Código Code	Pressure setting (bar) Étalonnage (bar) Настройка (Бар) Calibrare (bar) Tarado (bar) Kalibrierung (bar)	Max Pow. (kW) Puiss. Max (kW) Макс. мощ-ть (кВт) Putere Maximă (kW) Pot. Máx (kW) Leist. Max (kW)	EURO EURO EURO EURO EURO EURO	Pack Cond. Уп-ка Ambalaj Caja Verp.
605.06.00	2,25	353	-	1
605.06.10	2,50	377	-	1
605.06.20	2,70	396	-	1
605.06.30	3,00	432	-	1
605.06.40	3,50	481	-	1
605.06.50	4,00	542	-	1
605.06.60	4,50	583	-	1
605.06.70	5,00	641	-	1
605.06.80	5,40	685	-	1
605.06.90	6,00	754	-	1

Certified safety relief valve 1"1/4 x 1"1/2 female connection

Soupape de sécurité qualifiée raccord femelle 1"1/4 x 1"1/2
Предохранительный клапан, внутренняя резьба 1"1/4 x 1"1/2
Supapă de siguranţă calificată prindere tip mamă 1"1/4 x 1"1/2
Válvula de seguridad cualificada 1"1/4H x 1"1/2H
Geprüftes Sicherheitsventil Aufsteckanschluss 1"1/4 x 1"1/2

Code Code Артикул Cod Código Code	Pressure setting (bar) Étalonnage (bar) Настройка (Бар) Calibrare (bar) Tarado (bar) Kalibrierung (bar)	Max Pow. (kW) Puiss. Max (kW) Макс. мощ-ть (кВт) Putere Maximă (kW) Pot. Máx (kW) Leist. Max (kW)	EURO EURO EURO EURO EURO EURO	Pack Cond. Уп-ка Ambalaj Caja Verp.
605.07.00	2,25	385	-	1
605.07.10	2,50	412	-	1
605.07.20	2,70	433	-	1
605.07.30	3,00	472	-	1
605.07.40	3,50	525	-	1
605.07.50	4,00	592	-	1
605.07.60	4,50	636	-	1
605.07.70	5,00	700	-	1
605.07.80	5,40	748	-	1
605.07.90	6,00	824	-	1

The Thermal power table provides the technician with a quick reference to match the chosen component to a certain heating system size.

100% MADE IN ITALY

666

Accessories for safety relief valve and thermal drainage. Drain channel composed of fitting elbow and collection funnel to reset back pressure at drainage.

Brass body
Channel connections MM UNI-EN-ISO 228
Funnel connections FF UNI-EN-ISO 228

- Max temperature 110°C

■ Technical drawing, page 11.02

Drain channel
Conduite d'évacuation
Сливной комплект
Sistem de dirijare de evacuare
Embudo y curva para descarga
Entladeförderer

Code Code Артикул Cod Código Code	Size Taille Размер Dimensiune Medida Abmessung	EURO EURO EURO EURO EURO EURO	Pack Cond. Уп-ка Ambalaj Caja Verp.
666.05.00	3/4"	-	1
666.06.00	1"	-	1
666.07.00	1"1/4	-	1
666.08.00	1"1/2	-	1

Combined sale
Elbow + Collection funnel.

351

Standard safety relief valve with controlled rise for fluids and neutral gases.

Brass body.
Stainless steel AISI 302 spring.
Obturator seal in EPDM.
Diaphragm in EPDM.
Threaded angle connections FF UNI-EN-ISO 228.

- Nominal pressure PN 10
- Max temperature 90°C
- Orifice diameter 15mm
- Opening overpressure +10%
- Closing discard pressure -20%
- Water-air usable fluid (Gr.2)

■ Technical drawing, page 11.02

Standard safety relief valve 1/2"x 1/2"female connection
Soupape de sécurité ordinaire raccord femelle 1/2" x 1/2"
Обычный предохранительный клапан, внутренняя резьба 1/2" x 1/2"
Supapă de siguranță ordinară prindere tip mamă 1/2" x 1/2"
Válvula de seguridad ordinaria 1/2"H x 1/2"H
Normales Sicherheitsventil Aufsteckanschluss 1/2" x 1/2"

Code Code Артикул Cod Código Code	Pressure setting (bar) Étalonnage (bar) Настройка (Бар) Calibrare (bar) Tarado (bar) Kalibrierung (bar)	Max Pow. (kW) Puiss. Max (kW) Макс. мощ-ть (кВт) Putere Maximă (kW) Pot. Máx (kW) Leist. Max (kW)	EURO EURO EURO EURO EURO EURO	Pack Cond. Уп-ка Ambalaj Caja Verp.
351.04.10	1,50	48	-	1
351.04.20	2,00	55	-	1
351.04.30	2,50	68	-	1
351.04.40	3,00	62	-	1
351.04.50	3,50	83	-	1
351.04.60	4,00	96	-	1
351.04.70	4,50	103	-	1
351.04.80	5,00	109	-	1
351.04.90	6,00	128	-	1
351.04.71	7,00	83	-	1
351.04.81	8,00	135	-	1
351.04.11	10,00	101	-	1

Standard safety relief valve 3/4"x 3/4"female connection
Soupape de sécurité ordinaire raccord femelle 3/4" x 3/4"
Обычный предохранительный клапан, внутренняя резьба 3/4" x 3/4"
Supapă de siguranță ordinară prindere tip mamă 3/4" x 3/4"
Válvula de seguridad ordinaria 3/4"H x 3/4"H
Normales Sicherheitsventil Aufsteckanschluss 3/4" x 3/4"

Code Code Артикул Cod Código Code	Pressure setting (bar) Étalonnage (bar) Настройка (Бар) Calibrare (bar) Tarado (bar) Kalibrierung (bar)	Max Pow. (kW) Puiss. Max (kW) Макс. мощ-ть (кВт) Putere Maximă (kW) Pot. Máx (kW) Leist. Max (kW)	EURO EURO EURO EURO EURO EURO	Pack Cond. Уп-ка Ambalaj Caja Verp.
351.05.10	1,50	48	-	1
351.05.20	2,00	55	-	1
351.05.30	2,50	68	-	1
351.05.40	3,00	62	-	1
351.05.50	3,50	83	-	1
351.05.60	4,00	96	-	1
351.05.70	4,50	103	-	1
351.05.80	5,00	109	-	1
351.05.90	6,00	128	-	1
351.05.71	7,00	83	-	1
351.05.81	8,00	135	-	1
351.05.11	10,00	101	-	1

- P.E.D. 97/23/CE IV
- D. Lgs 25.02.2000 n°93

CE 1115

100% MADE IN ITALY

352

Standard safety relief valve with controlled rise for fluids and neutral gases.

Brass body.
Stainless steel AISI 302 spring.
Obturator seal in EPDM.
Diaphragm in EPDM.
Threaded angle connections MF UNI-EN-ISO 228.

- Nominal pressure PN 10
- Max temperature 90°C
- Orifice diameter 15mm
- Opening overpressure +10%
- Closing discard pressure -20%
- Water-air usable fluid (Gr.2)

■ Technical drawing, page 11.02

Standard safety relief valve male 1/2" x female 1/2" connection

Soupape de sécurité ordinaire raccord mâle 1/2" x femelle 1/2"

Обычный предохранительный клапан, наружная резьба 1/2" x внутренняя 1/2"

Supapă de siguranţă ordinară prindere tip tată 1/2" x de tip mamă 1/2"

Válvula de seguridad ordinaria 1/2"M x 1/2"H

Normales Sicherheitsventil Steckanschluss 1/2" x Aufsteckanschluss 1/2"

Code Code Артикул Cod Código Code	Pressure setting (bar) Étalonnage (bar) Настройка (Бар) Calibrare (bar) Tarado (bar) Kalibrierung (bar)	Max Pow. (kW) Puiss. Max (kW) Макс. мощ-ть (кВт) Putere Maximă (kW) Pot. Máx (kW) Leist. Max (kW)	EURO EURO EURO EURO EURO EURO	Pack Cond. Уп-ка Ambalaj Caja Verp.
352.04.10	1,50	48	-	1
352.04.20	2,00	55	-	1
352.04.30	2,50	68	-	1
352.04.40	3,00	62	-	1
352.04.50	3,50	83	-	1
352.04.60	4,00	96	-	1
352.04.70	4,50	103	-	1
352.04.80	5,00	109	-	1
352.04.90	6,00	128	-	1
352.04.71	7,00	83	-	1
352.04.81	8,00	135	-	1
352.04.11	10,00	101	-	1

Standard safety relief valve male 1/2" x female 3/4" connection

Soupape de sécurité ordinaire raccord mâle 1/2" x femelle 3/4"

Обычный предохранительный клапан , наружная резьба 1/2" x внутренняя 3/4"

Supapă de siguranţă ordinară prindere tip tată 1/2" x de tip mamă 3/4"

Válvula de seguridad ordinaria con manómetro 1/2"M x 3/4"H

Normales Sicherheitsventil Steckanschluss 1/2" x Aufsteckanschluss 3/4"

Code Code Артикул Cod Código Code	Pressure setting (bar) Étalonnage (bar) Настройка (Бар) Calibrare (bar) Tarado (bar) Kalibrierung (bar)	Max Pow. (kW) Puiss. Max (kW) Макс. мощ-ть (кВт) Putere Maximă (kW) Pot. Máx (kW) Leist. Max (kW)	EURO EURO EURO EURO EURO EURO	Pack Cond. Уп-ка Ambalaj Caja Verp.
352.05.10	1,50	48	-	1
352.05.20	2,00	55	-	1
352.05.30	2,50	68	-	1
352.05.40	3,00	62	-	1
352.05.50	3,50	83	-	1
352.05.60	4,00	96	-	1
352.05.70	4,50	103	-	1
352.05.80	5,00	109	-	1
352.05.90	6,00	128	-	1
352.05.71	7,00	83	-	1
352.05.81	8,00	135	-	1
352.05.11	10,00	101	-	1

- P.E.D. 97/23/CE IV
- D. Lgs 25.02.2000 n°93

CE 1115

100% MADE IN ITALY

353

Standard safety relief valve with controlled rise for fluids and neutral gases, complete with dial pressure gauge.

Brass body.
Stainless steel AISI 302 spring.
Obturator seal in EPDM.
Diaphragm in EPDM.
Threaded angle connections FF UNI-EN-ISO 228.
Pressure gauge connection F1/4" UNI-EN-ISO 228

- Nominal pressure PN 10
- Max temp. 90°C
- Orifice diameter 15mm
- Opening overpressure +10%
- Closing discard pressure -20%
- Pressure gauge scale 0…400KPa for valves < 400KPa
- Pressure gauge scale 0…1000KPa for valves > 400KPa
- Water-air usable fluid (Gr.2)

■ Technical drawing, page 11.02

- P.E.D. 97/23/CE IV
- D. Lgs 25.02.2000 n°93

CE 1115

002

Standard safety relief valve 1/2"x 1/2"female connection with pressure gauge

Soupape de sécurité ordinaire raccord femelle 1/2" x 1/2" avec manomètre

Обычный предохранительный клапан с манометром, внутренняя резьба 1/2" x 1/2"

Supapă de siguranță ordinară prindere tip mamă 1/2" x 1/2" cu manometru

Válvula de seguridad ordinaria con manómetro 1/2"H x 1/2"H

Normales Sicherheitsventil Aufsteckanschluss 1/2" x 1/2" mit Manometer

Code Code Артикул Cod Código Code	Pressure setting (bar) Étalonnage (bar) Настройка (Бар) Calibrare (bar) Tarado (bar) Kalibrierung (bar)	Max Pow. (kW) Puiss. Max (kW) Макс. мощ-ть (кВт) Putere Maximă (kW) Pot. Máx (kW) Leist. Max (kW)	EURO EURO EURO EURO EURO EURO	Pack Cond. Уп-ка Ambalaj Caja Verp.
353.04.10	1,50	48	-	1
353.04.20	2,00	55	-	1
353.04.30	2,50	68	-	1
353.04.40	3,00	62	-	1
353.04.50	3,50	83	-	1
353.04.60	4,00	96	-	1
353.04.70	4,50	103	-	1
353.04.80	5,00	109	-	1
353.04.90	6,00	128	-	1
353.04.71	7,00	83	-	1
353.04.81	8,00	135	-	1
353.04.11	10,00	101	-	1

Standard safety relief valve 3/4"x 3/4"female connection with pressure gauge

Soupape de sécurité ordinaire raccord femelle 3/4" x 3/4" avec manomètre

Обычный предохранительный клапан с манометром, внутренняя резьба 3/4" x 3/4"

Supapă de siguranță ordinară prindere tip mamă 3/4" x 3/4" cu manometru

Válvula de seguridad ordinaria con manómetro 3/4"H x 3/4"H

Normales Sicherheitsventil Aufsteckanschluss 3/4" x 3/4" mit Manometer

Code Code Артикул Cod Código Code	Pressure setting (bar) Étalonnage (bar) Настройка (Бар) Calibrare (bar) Tarado (bar) Kalibrierung (bar)	Max Pow. (kW) Puiss. Max (kW) Макс. мощ-ть (кВт) Putere Maximă (kW) Pot. Máx (kW) Leist. Max (kW)	EURO EURO EURO EURO EURO EURO	Pack Cond. Уп-ка Ambalaj Caja Verp.
353.05.10	1,50	48	-	1
353.05.20	2,00	55	-	1
353.05.30	2,50	68	-	1
353.05.40	3,00	62	-	1
353.05.50	3,50	83	-	1
353.05.60	4,00	96	-	1
353.05.70	4,50	103	-	1
353.05.80	5,00	109	-	1
353.05.90	6,00	128	-	1
353.05.71	7,00	83	-	1
353.05.81	8,00	135	-	1
353.05.11	10,00	101	-	1

354

Standard safety relief valve with controlled rise for fluids and neutral gases, complete with dial pressure gauge.

Brass body.
Stainless steel AISI 302 spring.
Obturator seal in EPDM.
Diaphragm in EPDM.
Threaded angle connections MF UNI-EN-ISO 228.
Pressure gauge connection F1/4" UNI-EN-ISO 228

- Nominal pressure PN 10
- Max temp. 90°C
- Orifice diameter 15mm
- Opening overpressure +10%
- Closing discard pressure -20%
- Pressure gauge scale 0…400KPa for valves < 400KPa
- Pressure gauge scale 0…1000KPa for valves > 400KPa
- Water-air usable fluid (Gr.2)

■ Technical drawing, page 11.02

- P.E.D. 97/23/CE IV
- D. Lgs 25.02.2000 n°93

CE 1115

002

Standard safety relief valve male 1/2"x female 1/2"connection with pressure gauge

Soupape de sécurité ordinaire raccord mâle 1/2" x femelle 1/2" avec manomètre

Обычный предохранительный клапан с манометром, наружная резьба 1/2" x внутренняя 1/2"

Supapă de siguranță ordinară prindere tip tată 1/2" x de tip mamă 1/2" cu manometru

Válvula de seguridad ordinaria con manómetro 1/2"M x 1/2"H

Normales Sicherheitsventil Steckanschluss 1/2" x Aufsteckanschluss 1/2" mit Manometer

Code Code Артикул Cod Código Code	Pressure setting (bar) Étalonnage (bar) Настройка (Бар) Calibrare (bar) Tarado (bar) Kalibrierung (bar)	Max Pow. (kW) Puiss. Max (kW) Макс. мощ-ть (кВт) Putere Maximă (kW) Pot. Máx (kW) Leist. Max (kW)	EURO EURO EURO EURO EURO EURO	Pack Cond. Уп-ка Ambalaj Caja Verp.
354.04.10	1,50	48	-	1
354.04.20	2,00	55	-	1
354.04.30	2,50	68	-	1
354.04.40	3,00	62	-	1
354.04.50	3,50	83	-	1
354.04.60	4,00	96	-	1
354.04.70	4,50	103	-	1
354.04.80	5,00	109	-	1
354.04.90	6,00	128	-	1
354.04.71	7,00	83	-	1
354.04.81	8,00	135	-	1
354.04.11	10,00	101	-	1

2201

T&P combined safety valve connections temperature and pressure.

Brass body.
Stainless steel AISI 302 spring.
Obturator seal in EPDM.
Diaphragm in EPDM.
Threaded connection M UNI-EN-ISO 228
Copper pipe end connection.

- Nominal pressure PN 10
- Temperature calibration 90+2 °C

T&P combined safety valve connections temperature and pressure 1/2"x Ø15

T&P Vanne de sécurité combinée température et pression des raccords 1/2" x Ø15

T&P Комбинированный предохранительный клапан температуры и давления, крепления 1/2" x Ø15

T&P Supapă de siguranță combinată pentru temperatură și presiune prinderi de 1/2" x Ø15

T&P Válvula de seguridad combinada temperatura y presión conexiones 1/2" x Ø15

T&P Sicherheitsventil kombiniert Temperatur und Anschlussdruck 1/2" x Ø15

Code Code Артикул Cod Código Code	Pressure setting (bar) Étalonnage (bar) Настройка (Бар) Calibrare (bar) Tarado (bar) Kalibrierung (bar)	Max Pow. (kW) Puiss. Max (kW) Макс. мощ-ть (кВт) Putere Maximă (kW) Pot. Máx (kW) Leist. Max (kW)	Probe length Longueur sonde Длина датчика Lungime sondă Longitud de la sonda Sondenlänge	EURO EURO EURO EURO EURO EURO	Pack Cond. Уп-ка Ambalaj Caja Verp.
2201.04.40	4,00	10	4"	-	1
2201.04.60	6,00	10	4"	-	1
2201.04.70	7,00	10	4"	-	1
2201.04.10	10,00	10	4"	-	1
2201.14.40	4,00	10	8"	-	1
2201.14.60	6,00	10	8"	-	1
2201.14.70	7,00	10	8"	-	1
2201.14.10	10,00	10	8"	-	1

T&P combined safety valve connections temperature and pressure 3/4"x Ø15

T&P Vanne de sécurité combinée température et pression des raccords 3/4" x Ø15

T&P Комбинированный предохранительный клапан температуры и давления, крепления 3/4" x Ø15

T&P Supapă de siguranță combinată pentru temperatură și presiune prinderi de 3/4" x Ø15

T&P Válvula de seguridad combinada temperatura y presión conexiones 3/4" x Ø15

T&P Sicherheitsventil kombiniert Temperatur und Anschlussdruck 3/4" x Ø15

Code Code Артикул Cod Código Code	Pressure setting (bar) Étalonnage (bar) Настройка (Бар) Calibrare (bar) Tarado (bar) Kalibrierung (bar)	Max Pow. (kW) Puiss. Max (kW) Макс. мощ-ть (кВт) Putere Maximă (kW) Pot. Máx (kW) Leist. Max (kW)	Probe length Longueur sonde Длина датчика Lungime sondă Longitud de la sonda Sondenlänge	EURO EURO EURO EURO EURO EURO	Pack Cond. Уп-ка Ambalaj Caja Verp.
2201.05.40	4,00	10	4"	-	1
2201.05.60	6,00	10	4"	-	1
2201.05.70	7,00	10	4"	-	1
2201.05.10	10,00	10	4"	-	1
2201.15.40	4,00	10	8"	-	1
2201.15.60	6,00	10	8"	-	1
2201.15.70	7,00	10	8"	-	1
2201.15.10	10,00	10	8"	-	1

T&P combined safety valve connections temperature and pressure 3/4"x Ø22

T&P Vanne de sécurité combinée température et pression des raccords 3/4" x Ø22

T&P Комбинированный предохранительный клапан температуры и давления, крепления 3/4" x Ø22

T&P Supapă de siguranță combinată pentru temperatură și presiune prinderi de 3/4" x Ø22

T&P Válvula de seguridad combinada temperatura y presión conexiones 3/4" x Ø22

T&P Sicherheitsventil kombiniert Temperatur und Anschlussdruck 3/4" x Ø22

Code Code Артикул Cod Código Code	Pressure setting (bar) Étalonnage (bar) Настройка (Бар) Calibrare (bar) Tarado (bar) Kalibrierung (bar)	Max Pow. (kW) Puiss. Max (kW) Макс. мощ-ть (кВт) Putere Maximă (kW) Pot. Máx (kW) Leist. Max (kW)	Probe length Longueur sonde Длина датчика Lungime sondă Longitud de la sonda Sondenlänge	EURO EURO EURO EURO EURO EURO	Pack Cond. Уп-ка Ambalaj Caja Verp.
2545.05.30	3,00	25	4"	-	1
2545.05.40	4,00	25	4"	-	1
2545.05.60	6,00	25	4"	-	1
2545.05.70	7,00	25	4"	-	1
2545.05.10	10,00	25	4"	-	1
2545.15.30	3,00	25	8"	-	1
2545.15.40	4,00	25	8"	-	1
2545.15.60	6,00	25	8"	-	1
2545.15.70	7,00	25	8"	-	1
2545.15.10	10,00	25	8"	-	1

P.E.D. 97/23/CE IV

CE 1115

New

100% MADE IN ITALY

2809

Standard safety relief valve manually adjustable for water outlet; suitable for sanitary installations.

Brass body.
Stainless steel AISI 302 spring.
Poppet valve seal in EPDM.
Diaphragm in EPDM.
Threaded angle connections FF UNI-EN-ISO 228.

- Nominal pressure NP10
- Max temperature 100°C
- Opening overpressure +10%
- Closing discard pressure -20%
- Water-air usable fluid (Gr.2)

Standard safety relief valve 1/2"x 3/4"female connection

Vanne de sécurité ordinaire raccord femelle 1/2" x 3/4"
Обычный предохранительный клапан, внутренняя резьба 1/2" x 3/4"
Supapă de siguranță standard prindere mamă 1/2" x 3/4"
Válvula de seguridad ordinaria conexión hembra 1/2" x 3/4"
Normales Sicherheitsventil Aufsteckanschluss 1/2" x 3/4"

Code Code Артикул Cod Código Code	Pressure setting (bar) Étalonnage (bar) Настройка (бар) Calibrare (bar) Tarado (bar) Kalibrierung (bar)	Max Pow. (kW) Puiss. Max (kW) Макс. мощ-ть (кВт) Putere Maximă (kW) Pot. Máx (kW) Leist. Max (kW)	EURO EURO EURO EURO EURO EURO	Pack Cond. Уп-ка Ambalaj Caja Verp.
2809.04.60	4,00	-	-	1
2809.04.90	6,00	-	-	1
2809.04.81	8,00	-	-	1
2809.04.11	10,00	-	-	1

Standard safety relief valve 3/4"x 1"female connection

Vanne de sécurité ordinaire raccord femelle 3/4" x 1"
Обычный предохранительный клапан, внутренняя резьба 3/4" x 1"
Supapă de siguranță standard prindere mamă 3/4" x 1"
Válvula de seguridad ordinaria conexión hembra 3/4" x 1"
Normales Sicherheitsventil Aufsteckanschluss 3/4" x 1"

Code Code Артикул Cod Código Code	Pressure setting (bar) Étalonnage (bar) Настройка (бар) Calibrare (bar) Tarado (bar) Kalibrierung (bar)	Max Pow. (kW) Puiss. Max (kW) Макс. мощ-ть (кВт) Putere Maximă (kW) Pot. Máx (kW) Leist. Max (kW)	EURO EURO EURO EURO EURO EURO	Pack Cond. Уп-ка Ambalaj Caja Verp.
2809.05.60	4,00	-	-	1
2809.05.90	6,00	-	-	1
2809.05.81	8,00	-	-	1
2809.05.11	10,00	-	-	1

Standard safety relief valve 1"x 1"1/4 female connection

Vanne de sécurité ordinaire raccord femelle 1" x 1"1/4
Обычный предохранительный клапан, внутренняя резьба 1" x 1"1/4
Supapă de siguranță standard prindere mamă 1" x 1"1/4
Válvula de seguridad ordinaria conexión hembra 1" x 1"1/4
Normales Sicherheitsventil Aufsteckanschluss 1" x 1"1/4

Code Code Артикул Cod Código Code	Pressure setting (bar) Étalonnage (bar) Настройка (бар) Calibrare (bar) Tarado (bar) Kalibrierung (bar)	Max Pow. (kW) Puiss. Max (kW) Макс. мощ-ть (кВт) Putere Maximă (kW) Pot. Máx (kW) Leist. Max (kW)	EURO EURO EURO EURO EURO EURO	Pack Cond. Уп-ка Ambalaj Caja Verp.
2809.06.60	4,00	-	-	1
2809.06.90	6,00	-	-	1
2809.06.81	8,00	-	-	1
2809.06.11	10,00	-	-	1

Standard safety relief valve 1"1/4 x 1"1/2 female connection

Vanne de sécurité ordinaire raccord femelle 1"1/4 x 1"1/2
Обычный предохранительный клапан, внутренняя резьба 1"1/4 x 1"1/2
Supapă de siguranță standard prindere mamă 1"1/4 x 1"1/2
Válvula de seguridad ordinaria conexión hembra 1"1/4 x 1"1/2
Normales Sicherheitsventil Aufsteckanschluss 1"1/4 x 1"1/2

Code Code Артикул Cod Código Code	Pressure setting (bar) Étalonnage (bar) Настройка (бар) Calibrare (bar) Tarado (bar) Kalibrierung (bar)	Max Pow. (kW) Puiss. Max (kW) Макс. мощ-ть (кВт) Putere Maximă (kW) Pot. Máx (kW) Leist. Max (kW)	EURO EURO EURO EURO EURO EURO	Pack Cond. Уп-ка Ambalaj Caja Verp.
2809.07.60	4,00	-	-	1
2809.07.90	6,00	-	-	1
2809.07.81	8,00	-	-	1
2809.07.11	10,00	-	-	1

- P.E.D. 97/23/CE IV
- D. Lgs 25.02.2000 n°93

CE 1115 TÜVRheinland

New

Safety valve for sanitary installations.

100% MADE IN ITALY

811

Standard safety relief valve manually adjustable for water outlet; suitable for heating installations.

Brass body.
Stainless steel INOX AISI 302 spring.
Poppet valve seal in EPDM.
Diaphragm in EPDM.
Threaded angle connections FF UNI-EN-ISO 228.

- Nominal pressure NP 10
- Max temperature 120°C
- Opening overpressure +10%
- Closing discard pressure -20%
- Water-air usable fluid (Gr.2)

Standard safety relief valve 1/2"x 3/4"female connection

Vanne de sécurité ordinaire raccord femelle 1/2" x 3/4"
Обычный предохранительный клапан, внутренняя резьба 1/2" x 3/4"
Supapă de siguranţă standard prindere mamă 1/2" x 3/4"
Válvula de seguridad ordinaria conexión hembra 1/2" x 3/4"
Normales Sicherheitsventil Aufsteckanschluss 1/2" x 3/4"

Code Code Артикул Cod Código Code	Pressure setting (bar) Étalonnage (bar) Настройка (Бар) Calibrare (bar) Tarado (bar) Kalibrierung (bar)	Max Pow. (kW) Puiss. Max (kW) Макс. мощ-ть (кВт) Putere Maximă (kW) Pot. Máx (kW) Leist. Max (kW)	EURO EURO EURO EURO EURO EURO	Pack Cond. Уп-ка Ambalaj Caja Verp.
811.14.30	2,50	50	-	1
811.14.40	3,00	50	-	1

Standard safety relief valve 3/4"x 1"female connection

Vanne de sécurité ordinaire raccord femelle 3/4" x 1"
Обычный предохранительный клапан, внутренняя резьба 3/4" x 1"
Supapă de siguranţă standard prindere mamă 3/4" x 1"
Válvula de seguridad ordinaria conexión hembra 3/4" x 1"
Normales Sicherheitsventil Aufsteckanschluss 3/4" x 1"

Code Code Артикул Cod Código Code	Pressure setting (bar) Étalonnage (bar) Настройка (Бар) Calibrare (bar) Tarado (bar) Kalibrierung (bar)	Max Pow. (kW) Puiss. Max (kW) Макс. мощ-ть (кВт) Putere Maximă (kW) Pot. Máx (kW) Leist. Max (kW)	EURO EURO EURO EURO EURO EURO	Pack Cond. Уп-ка Ambalaj Caja Verp.
811.15.30	2,50	100	-	1
811.15.40	3,00	100	-	1

Standard safety relief valve 1"x 1"1/4 female connection

Vanne de sécurité ordinaire raccord femelle 1" x 1"1/4
Обычный предохранительный клапан, внутренняя резьба 1" x 1"1/4
Supapă de siguranţă standard prindere mamă 1" x 1"1/4
Válvula de seguridad ordinaria conexión hembra 1" x 1"1/4
Normales Sicherheitsventil Aufsteckanschluss 1" x 1"1/4

Code Code Артикул Cod Código Code	Pressure setting (bar) Étalonnage (bar) Настройка (Бар) Calibrare (bar) Tarado (bar) Kalibrierung (bar)	Max Pow. (kW) Puiss. Max (kW) Макс. мощ-ть (кВт) Putere Maximă (kW) Pot. Máx (kW) Leist. Max (kW)	EURO EURO EURO EURO EURO EURO	Pack Cond. Уп-ка Ambalaj Caja Verp.
811.16.30	2,50	200	-	1
811.16.40	3,00	200	-	1

Standard safety relief valve 1"1/4 x 1"1/2 female connection

Vanne de sécurité ordinaire raccord femelle 1"1/4 x 1"1/2
Обычный предохранительный клапан, внутренняя резьба 1"1/4 x 1"1/2
Supapă de siguranţă standard prindere 1"1/4 x 1"1/2
Válvula de seguridad ordinaria conexión hembra 1"1/4 x 1"1/2
Normales Sicherheitsventil Aufsteckanschluss 1"1/4 x 1"1/2

Code Code Артикул Cod Código Code	Pressure setting (bar) Étalonnage (bar) Настройка (Бар) Calibrare (bar) Tarado (bar) Kalibrierung (bar)	Max Pow. (kW) Puiss. Max (kW) Макс. мощ-ть (кВт) Putere Maximă (kW) Pot. Máx (kW) Leist. Max (kW)	EURO EURO EURO EURO EURO EURO	Pack Cond. Уп-ка Ambalaj Caja Verp.
811.17.30	2,50	300	-	1
811.17.40	3,00	300	-	1

- P.E.D. 97/23/CE IV
- D. Lgs 25.02.2000 n°93

New

Safety valve for sanitary installations.

HYDRAULIC BALANCING DEVICES

DISPOSITIFS POUR L'ÉQUILIBRAGE HYDRAULIQUE

УСТРОЙСТВА ДЛЯ ГИДРАВЛИЧЕСКОЙ БАЛАНСИРОВКИ

DISPOZITIVE PENTRU ECHILIBRARE HIDRAULICĂ

DISPOSITIVOS PARA EL BALANCE HIDRÁULICO

VORRICHTUNGEN ZUM HYDRAULIKAUSGLEICH

Balancing valves

Flow measuring devices

Automatic flow control valves

Pressure independent control valves

Tools and devices

619

Threaded execution, complete with knob with revs indicator, memory stop function to block setting position, prearranged for insertion of pressure plugs for indirect reading of flow rate.

Body in contact parts in brass.
Seals in VITON.
Threaded connections FF UNI-EN-ISO 228

- Max operating pressure 2000 kPa
- Allowed temperatures -10...+100 °C
- Equipercentage regulation
- Allowed fluid water and water+glycol 50 %
- Pressure gauge plugs connection G1/8"

■ Technical drawing, page 11.02

Threaded Balanflow balancing valve
Vanne d'équilibrage Balanflow filetée
Резьбовой балансировочный клапан Balanflow
Supapă de echilibrare Balanflow filetată
Válvula de equilibrado Balanflow, conexiones roscadas
Ausgleichsventil Balanflow mit Gewinde

Code Code Артикул Cod Código Code	Size Taille Размер Dimensiune Medida Abmessung	Kvs - m^3/h Kvs - m^3/h Kvs - $м^3/ч$ Kvs - m^3/h Kvs - m^3/h Kvs - m^3/h	EURO EURO EURO EURO EURO EURO	Pack Cond. Уп-ка Ambalaj Caja Verp.
619.03.50	3/8"	2,35	-	1
619.04.50	1/2"	3,35	-	1
619.05.50	3/4"	4,00	-	1
619.06.50	1"	11,20	-	1
619.07.50	1"1/4	13,40	-	1
619.08.50	1"1/2	19,00	-	1
619.09.50	2"	28,40	-	1

Designed for the insertion of pressure taps for indirect flow measurement.

619

Flanged execution, complete with knob with revs indicator, memory stop function to block setting position, prearranged for insertion of pressure plugs for indirect reading of flow rate.

Cast-iron body
Brass contact parts.
Seals in EPDM.
Flanged connections PN 16 UNI 2223

- Max operating pressure 1600 kPa
- Allowed temperatures -10...+120 °C
- Equipercentage regulation
- Allowed fluid water and water+glycol 50 %
- Pressure gauge plugs connection G1/4"

■ Technical drawing, page 11.03

Flanged Balanflow balancing valve
Vanne d'équilibrage Balanflow à bride
Фланцевый балансировочный клапан Balanflow
Supapă de echilibrare Balanflow cu flanșă
Válvula de equilibrado Balanflow, conexiones embridadas
Ausgleichsventil Balanflow mit Flansch

Code Code Артикул Cod Código Code	Size Taille Размер Dimensiune Medida Abmessung	Kvs - m^3/h Kvs - m^3/h Kvs - $м^3/ч$ Kvs - m^3/h Kvs - m^3/h Kvs - m^3/h	EURO EURO EURO EURO EURO EURO	Pack Cond. Уп-ка Ambalaj Caja Verp.
619.10.60	DN 65	74	-	1
619.11.60	DN 80	111	-	1
619.13.60	DN 100	165	-	1
619.14.60	DN 125	242	-	1
619.15.60	DN 150	372	-	1
619.17.60	DN 200	704	-	1
619.19.60	DN 250	812	-	1
619.21.60	DN 300	1380	-	1

Designed for the insertion of pressure taps for indirect flow measurement.

1147

Thermal insulation made up from expanded polyethylene half-bearings with external antiscratch coating.

Half-bearings fixed with double-sided adhesive tape already applied.

- Fire behaviour class1
- Density 33 kg/m3
- Max operating temperature -40 +90 °C

Balanflow valve thermal shell
Coque isolante vanne Balanflow
Теплоизоляционный кожух для балансировочного клапана Balanflow
Carcasă termică supapa Balanflow
Aislamiento térmico para válvula de equilibrado Balanflow
Thermoschale Ventil Balanflow

Code Code Артикул Cod Código Code	Size Taille Размер Dimensiune Medida Abmessung	EURO EURO EURO EURO EURO EURO	Pack Cond. Уп-ка Ambalaj Caja Verp.
1147.03.00	3/8"	-	10
1147.04.00	1/2"	-	10
1147.05.00	3/4"	-	10
1147.06.00	1"	-	10
1147.07.00	1"1/4	-	5
1147.08.00	1"1/2	-	5
1147.09.00	2"	-	5

620

Threaded measuring stub pipe for indirect reading of transit flow rate, complete with quick coupling pressure plugs.

Body and pressure plugs in brass.
Pressure plugs internal seals in EPDM.
Threaded connections MF UNI-EN-ISO 228.

- Max operating pressure 2000 kPa
- Allowed temperatures -30...+120 °C
- Allowed fluid water and water+glycol 50 %
- Pressure gauge plugs connection G 1/8"

■ Technical drawing, page 11.03

Threaded flow rate measuring stub pipe
Segment de mesure de débit fileté
Резьбовой патрубок для измерения расхода
Vană de măsurare a debitului filetată
Tronco medidor de caudal, con tomas de presión, conexiones roscadas
Gewindemessstab Durchflussmenge

Code Code Артикул Cod Código Code	Size Taille Размер Dimensiune Medida Abmessung	Kvs - m^3/h Kvs - m^3/h Kvs - $м^3/ч$ Kvs - m^3/h Kvs - m^3/h Kvs - m^3/h	EURO EURO EURO EURO EURO EURO	Pack Cond. Уп-ка Ambalaj Caja Verp.
620.04.90	1/2" LF	1,02	-	1
620.04.50	1/2"	2,85	-	1
620.05.50	3/4"	5,80	-	1
620.06.50	1"	8,80	-	1
620.07.50	1"1/4	20,10	-	1
620.08.50	1"1/2	31,20	-	1
620.09.50	2"	69,90	-	1

620

Flanged measuring stub pipe for indirect reading of transit flow rate, complete with quick coupling pressure plugs.

Grey cast-iron body
Brass pressure plugs.
Pressure plugs internal seals in EPDM.
Wafer flanged connections PN 16

- Max operating pressure 1600 kPa
- Allowed temperatures -10...+120 °C
- Allowed fluid water and water+glycol 50 %
- Pressure gauge plugs connection G 1/4"

■ Technical drawing, page 11.03

Flanged flow rate measuring stub pipe
Segment de mesure de débit à bride
Фланцевый патрубок для измерения расхода
Vană de măsurare a debitului cu flanșă
Tronco medidor de caudal, con tomas de presión, para instalación entre bridas
Geflanschter Messstab Durchflussmenge

Code Code Артикул Cod Código Code	Size Taille Размер Dimensiune Medida Abmessung	Kvs - m^3/h Kvs - m^3/h Kvs - $м^3/ч$ Kvs - m^3/h Kvs - m^3/h Kvs - m^3/h	EURO EURO EURO EURO EURO EURO	Pack Cond. Уп-ка Ambalaj Caja Verp.
620.10.00	DN 65	93	-	1
620.11.00	DN 80	126	-	1
620.13.00	DN 100	244	-	1
620.14.00	DN 125	415	-	1
620.15.00	DN 150	540	-	1
620.17.00	DN 200	1010	-	1
620.19.00	DN 250	1450	-	1
620.21.00	DN 300	2400	-	1

Wafer assembly between two flanges PN16

2873

Automatic flow control valve with externally adjustable cartridge.

It allows to adjust the rate to the desired value, by acting on the cartridge through suitable adjusting device.

Such operation does not involve the valve.

Brass body.
Polymer cartridge with EPDM diaphragm.
Indicator with graduated scale.
Threaded connections FF UNI-EN-ISO 228

- Max operating pressure 1600 kPa
- Allowed temperatures -20...+120°C
- Allowed fluid water and water+glycol 50%
- Pressure gauge plugs connection G1/8"

Automatic flow control valve
Stabilisateur automatique de débit
Автоматический стабилизатор напора
Stabilizator automat de debit
Estabilizador automático de caudal
Automatischer Stabilisator Durchflussmenge

Code Code Артикул Cod Código Code	Size Taille Размер Dimensiune Medida Abmessung	DP - kPa DP - kPa DP - кПа DP - kPa DP - kPa DP - kPa	Flow rate - m³/h Débit - m³/h Напор - м³/ч Debit - m³/h Caudal - m³/h Durchflussmenge - m³/h	Cartridge colour Couleur cartouche Цвет картриджа Culoare cartuș Color de cartucho Farbe Einsatz	EURO EURO EURO EURO EURO EURO	Pack Cond. Уп-ка Ambalaj Caja Verp.
2873.04.10	1/2"	17 - 210	0,100 - 0,412	Black	-	1
2873.04.20	1/2"	17 - 210	0,157 - 0,609	Green	-	1
2873.04.30	1/2"	17 - 200	0,275 - 0,825	Red - b. white	-	1
2873.04.40	1/2"	30 - 400	0,406 - 1,270	Red - b. grey	-	1
2873.05.10	3/4"	17 - 210	0,100 - 0,412	Black	-	1
2873.05.20	3/4"	17 - 210	0,157 - 0,609	Green	-	1
2873.05.30	3/4"	17 - 200	0,275 - 0,825	Red - b. white	-	1
2873.05.40	3/4"	30 - 400	0,406 - 1,270	Red - b. grey	-	1
2873.06.10	1"	17 - 210	0,100 - 0,412	Black	-	1
2873.06.20	1"	17 - 210	0,157 - 0,609	Green	-	1
2873.06.30	1"	17 - 200	0,275 - 0,825	Red - b. white	-	1
2873.06.40	1"	30 - 400	0,406 - 1,270	Red - b. grey	-	1

product in preparation

New

Replaceable cartridge. See spare parts pricelist.

Cartridges are available in different colours to allow immediate identification of both the pressure field and flow rate.

2874

Automatic flow control valve with externally adjustable cartridge, provided with pressure taps.

It allows to adjust the rate to the desired value, by acting on the cartridge through suitable adjusting device.

Such operation does not involve the valve.

Brass body.
Polymer cartridge with EPDM diaphragm.
Indicator with graduated scale.
Threaded connections FF UNI-EN-ISO 228

- Max operating pressure 1600 kPa
- Allowed temperatures -20...+120°C
- Allowed fluid water and water+glycol 50%
- Pressure gauge plugs connection G1/8"

Automatic flow control valve provided with pressure taps
Stabilisateur automatique de débit équipé de prises de pression
Автоматический стабилизатор напора с приёмниками давления
Stabilizator automat de debit dotat cu prize de presiune
Estabilizador automático de caudal dotado de tomas de presión
Automatischer Stabilisator Durchflussmenge mit Druckanschlüssen

Code Code Артикул Cod Código Code	Size Taille Размер Dimensiune Medida Abmessung	DP - kPa DP - kPa DP - кПа DP - kPa DP - kPa DP - kPa	Flow rate - m³/h Débit - m³/h Напор - м³/ч Debit - m³/h Caudal - m³/h Durchflussmenge - m³/h	Cartridge colour Couleur cartouche Цвет картриджа Culoare cartuș Color de cartucho Farbe Einsatz	EURO EURO EURO EURO EURO EURO	Pack Cond. Уп-ка Ambalaj Caja Verp.
2874.04.10	1/2"	17 - 210	0,100 - 0,412	Black	-	1
2874.04.20	1/2"	17 - 210	0,157 - 0,609	Green	-	1
2874.04.30	1/2"	17 - 200	0,275 - 0,825	Red - b. white	-	1
2874.04.40	1/2"	30 - 400	0,406 - 1,270	Red - b. grey	-	1
2874.05.10	3/4"	17 - 210	0,100 - 0,412	Black	-	1
2874.05.20	3/4"	17 - 210	0,157 - 0,609	Green	-	1
2874.05.30	3/4"	17 - 200	0,275 - 0,825	Red - b. white	-	1
2874.05.40	3/4"	30 - 400	0,406 - 1,270	Red - b. grey	-	1
2874.06.10	1"	17 - 210	0,100 - 0,412	Black	-	1
2874.06.20	1"	17 - 210	0,157 - 0,609	Green	-	1
2874.06.30	1"	17 - 200	0,275 - 0,825	Red - b. white	-	1
2874.06.40	1"	30 - 400	0,406 - 1,270	Red - b. grey	-	1

product in preparation

New

Replaceable cartridge. See spare parts pricelist.

Cartridges are available in different colours to allow immediate identification of both the pressure field and flow rate.

Valve provided with two pressure taps.

100% MADE IN ITALY

2961

Cap adjusting wrench.

It allows to adjust the flow rate to the desired value, by acting on the cartridge.

Such operation does not involve the valve.

Cap adjusting wrench.
Clé pour réglage cartouche
Ключ для регулирования картриджа
Cheie de reglare a cartușului
Llave de regulación cartucho
Schlüssel zur Einsatzregulierung

Code Code Артикул Cod Código Code	EURO EURO EURO EURO EURO EURO	Pack Cond. Уп-ка Ambalaj Caja Verp.
2961.00.02	-	1

product in preparation

New

2873

Pressure independent control valve.

It allows to keep the flow rate to the desired level even when pressure conditions change in the circuit where it is inserted.

Brass body.
Polymer cartridge with EPDM diaphragm.
Indicator with graduated scale.
Threaded connections FF UNI-EN-ISO 228

- Max operating pressure 1600 kPa
- Allowed temperatures -20...+120°C
- Allowed fluid water and water+glycol 50%
- Pressure gauge plugs connection G1/8"

Pressure independent control valve
Vanne de réglage indépendante de la pression
Клапан с независимой регулировкой давления
Supapă de reglare independentă a presiunii
Válvulas de regulación independiente de la presión
Unabhängiges Druckregelventil

Code Code Артикул Cod Código Code	Size Taille Размер Dimensiune Medida Abmessung	DP - kPa DP - kPa DP - кПа DP - kPa DP - kPa DP - kPa	Flow rate - m^3/h Débit - m^3/h Напор - $м^3/ч$ Debit - m^3/h Caudal - m^3/h Durchflussmenge - m^3/h	Cartridge colour Couleur cartouche Цвет картриджа Culoare cartuş Color de cartucho Farbe Einsatz	EURO EURO EURO EURO EURO EURO	Pack Cond. Уп-ка Ambalaj Caja Verp.
2873.04.50	1/2"	16 - 200	0,057 - 0,575	O.R. Green	-	1
2873.04.60	1/2"	30 - 400	0,064 - 1,110	O.R. Black	-	1
2873.05.50	3/4"	16 - 200	0,057 - 0,575	O.R. Green	-	1
2873.05.60	3/4"	30 - 400	0,064 - 1,110	O.R. Black	-	1
2873.06.50	1"	16 - 200	0,057 - 0,575	O.R. Green	-	1
2873.06.60	1"	30 - 400	0,064 - 1,110	O.R. Black	-	1

product in preparation

New

Replaceable cartridge. See spare parts pricelist.

Cartridges are available in different colours to allow immediate identification of both the pressure field and flow rate.

2874

Pressure independent controle valve, provided with pressure taps.

It allows to keep the flow rate to the desired level even when pressure conditions change in the circuit where it is inserted.

Brass body.
Polymer cartridge with EPDM diaphragm.
Indicator with graduated scale.
Threaded connections FF UNI-EN-ISO 228.

- Max operating pressure 1600 kPa
- Allowed temperatures -20...+120°C
- Allowed fluid water and water+glycol 50%
- Pressure gauge plugs connection G1/8"

Pressure independent control valve provided with pressure outlets
Vanne de réglage indépendante de la pression équipée de prises de pression
Клапан для независимой регулировки давления с приёмниками давления
Supapă de reglare independentă a presiunii dotată cu prize de presiune
Válvula de regulación independiente de la presión dotada de tomas de presión
Unabhängiges Druckregelventil mit Druckanschlüssen

Code Code Артикул Cod Código Code	Size Taille Размер Dimensiune Medida Abmessung	DP - kPa DP - kPa DP - кПа DP - kPa DP - kPa DP - kPa	Flow rate - m^3/h Débit - m^3/h Напор - $м^3/ч$ Debit - m^3/h Caudal - m^3/h Durchflussmenge - m^3/h	Cartridge colour Couleur cartouche Цвет картриджа Culoare cartuş Color de cartucho Farbe Einsatz	EURO EURO EURO EURO EURO EURO	Pack Cond. Уп-ка Ambalaj Caja Verp.
2874.04.50	1/2"	16 - 200	0,057 - 0,575	O.R. Green	-	1
2874.04.60	1/2"	30 - 400	0,064 - 1,110	O.R. Black	-	1
2874.05.50	3/4"	16 - 200	0,057 - 0,575	O.R. Green	-	1
2874.05.60	3/4"	30 - 400	0,064 - 1,110	O.R. Black	-	1
2874.06.50	1"	16 - 200	0,057 - 0,575	O.R. Green	-	1
2874.06.60	1"	30 - 400	0,064 - 1,110	O.R. Black	-	1

product in preparation

New

Replaceable cartridge. See spare parts pricelist.

Cartridges are available in different colours to allow immediate identification of both the pressure field and flow rate.

Valve provided with two pressure taps.

2882

Electromechanical servocontrol.
Complete with ring nut clamping to valve body in electric power cable.

- Power supply 24/230 V
- Consumption 5 W
- Frequency 50Hz
- Electric protection IP54
- Cable length 1 m

Electromechanical servocontrol
Servocommande électromécanique
Электромеханический сервопривод
Servocomandă electromecanică
Servomando electromecánico
Elektrothermische Servosteuerung

Code Code Артикул Cod Código Code	Power supply Alimentation Питание Alimentare Alimentación Versorgung	EURO EURO EURO EURO EURO EURO	Pack Cond. Уп-ка Ambalaj Caja Verp.
2882.00.02	24V AC 0...10V	-	1
2882.00.12	110-230V AC 3 PUNTI	-	1
2882.00.22	24V AC 3 PUNTI	-	1

product in preparation

New

2881

Thermo-electric servocontrol.
Complete with ring nut clamping to valve body in electric power cable.

- Power supply 24/230 V
- Consumption 5 W
- Frequency 50Hz
- Electric protection IP54
- Cable length 1 m

Thermo-electric servocontrol
Servocommande électrothermique
Электротермический сервопривод
Servocomandă electrotermică
Servomando electrotérmico
Elektrothermische Servosteuerung

Code Code Артикул Cod Código Code	Power supply Alimentation Питание Alimentare Alimentación Versorgung	EURO EURO EURO EURO EURO EURO	Pack Cond. Уп-ка Ambalaj Caja Verp.
2881.00.02	24V AC	-	1
2881.00.12	24V AC/DC	-	1
2881.00.22	230V AC	-	1

product in preparation

New

100% MADE IN ITALY

622

Portable electronic differential pressure and flow rate measuring instrument. Suitable for detecting work parameters of balancing valves series 619 and of measuring stub pipes series 620. Battery-operated.

Supplied complete with professional case and holes for connection to circuit
Pair of adapters code 932.01.00 not included

- Max differential pressure 1700 KPa
- Max inlet pressure 3200 KPa
- Fluid temperature -20...+120 °C
- Power supply: four batteries type AA
- Allowed fluid water and water+glycol max 50 %
- Instrument 2.5 Kg
- Dimensions 470x370x110 mm
- Connectable to PC, software supplied

Portable electronic measuring instrument
Mesureur électronique portatif
Электронный измеритель давления
Dispozitiv de măsurare electronic portabil
Medidor electrónico de diferencial para determinación del caudal
Tragbares elektronisches Messgerät

Code Code Артикул Cod Código Code	EURO EURO EURO EURO EURO EURO	Pack Cond. Уп-ка Ambalaj Caja Verp.
622.00.00	-	1

Standard Languages: Italian - English - Dutch - French - German - Spanish.

For other countries a flash upgrate can be download from web site www.rbm.eu

004

932

Pair of needle adapters to measure pressure. Connection of electronic differential pressure measuring instrument to pressure plugs present on measuring stub pipes and Balanflow balancing valves 3/8" ÷ 2"

Brass body
Steel needle
Threaded connections F UNI-EN-ISO 228

- Max operating pressure 1600 kPa
- Max temperature 120 °C

Needle adapters
Adaptateurs à aiguille
Игольчатый адаптер
Adaptoare cu ac
Par adaptadores de aguja para tomas de presión
Nadeladapter

Code Code Артикул Cod Código Code	Size Taille Размер Dimensiune Medida Abmessung	EURO EURO EURO EURO EURO EURO	Pack Cond. Уп-ка Ambalaj Caja Verp.
932.01.00	1/8"	-	1

Used to connect pressure plugs code 621.01.50 to digital measuring instrument code 622.00.00

004

621

Pair of pressure plugs for threaded balancing valves.

Body and plugs in brass.
Pressure plugs internal seals in EPDM.
Threaded connections M UNI-EN-ISO 228

- Max operating pressure 1600 kPa
- Max temperature 120 °C

Pressure plugs
Prises de pression
Штуцеры давления
Prize de presiune
Par tomas de presión para tronco medidor de caudal y válvula de equilibrado
Drückanschlüsse

Code Code Артикул Cod Código Code	Size Taille Размер Dimensiune Medida Abmessung	EURO EURO EURO EURO EURO EURO	Pack Cond. Уп-ка Ambalaj Caja Verp.
621.01.50*	1/8"	-	1

*Pressure plugs for Balanflow valves and threaded stub pipes

Pressure plugs for needle adapters code 932.01.00

004

1422

Reduction torque 1/4"M X 1/8"F.
To adapt 1/8" pressure gauge plugs code 621.01.50, to stub pipes and RBM flanged balancing valves from DN 65 to DN 300.

Nickel plated brass body
Threaded connections MF UNI-EN-ISO 228

- Max operating pressure 1600 kPa
- Max temperature 120 °C

Reduction kit 1/4"M x 1/8"F
Kit de réduction 1/4"M x 1/8"F
Редукционный комплект 1/4 нар" x1/8" вн.
Kit de reducţie 1/4"M x 1/8"F
Par reducciones para tomas de presión en tronco medidor de caudal para bridas y válvula de equilibrado embridada, 1/4"M x 1/8"H
Bausatz Reduzierung 1/4"M x 1/8"F

Code Code Артикул Cod Código Code	Size A Dimension A Размер A Dimensiunea A Medida A Abmessung A	Size B Dimension B Размер B Dimensiunea B Medida B Abmessung B	EURO EURO EURO EURO EURO EURO	Pack Cond. Уп-ка Ambalaj Caja Verp.
1422.02.00	1/4"M	1/8"F	-	1

In case the dimensions of pressure gauge plugs are not standard (G 1/4" F), please contact RBM offices for more information regarding adapter for connecting measure instrument.

004

100% MADE IN ITALY

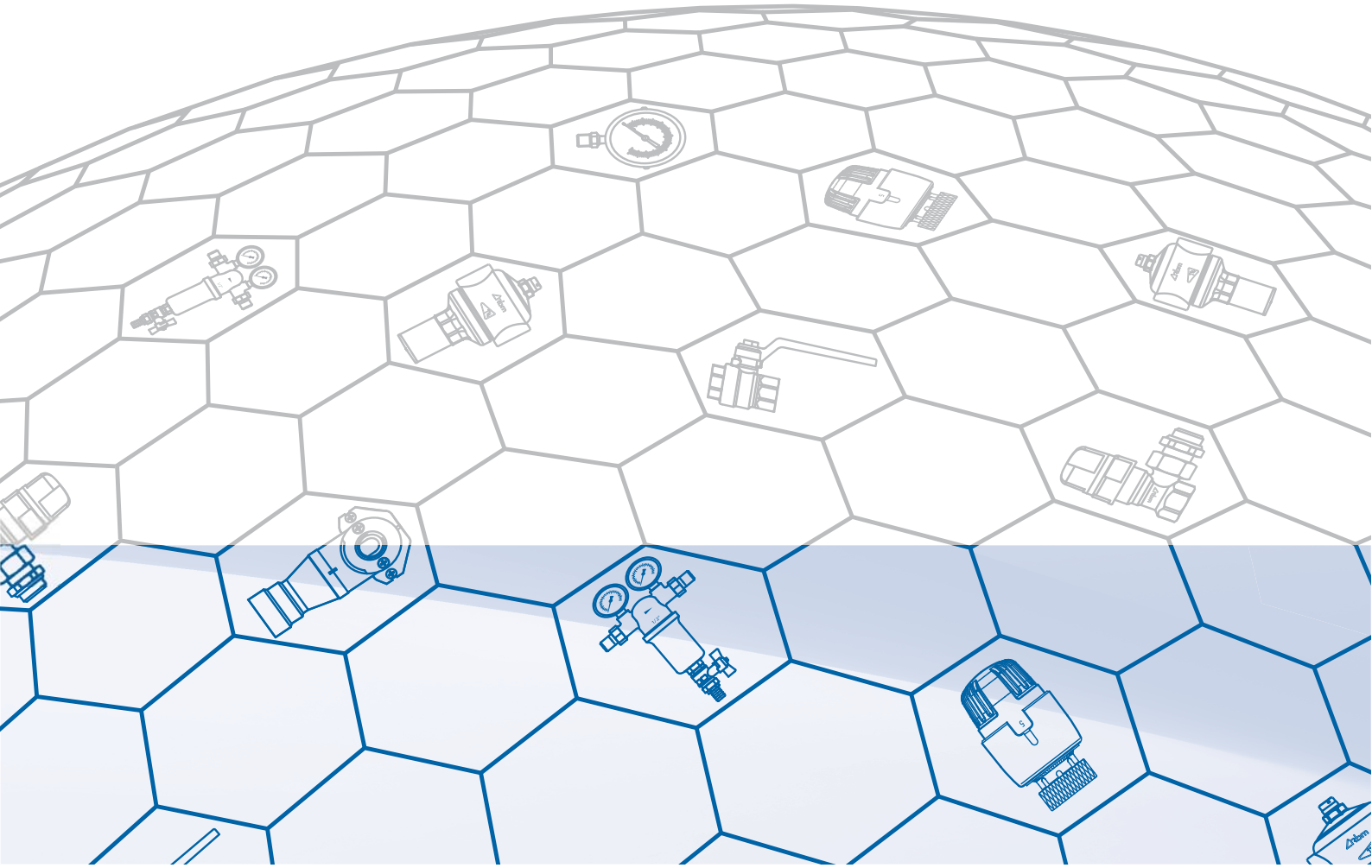

AIR VENT VALVE, DEAERATORS, DIRT SEPARATORS

VANNE DE PURGE D'AIR, DÉSAÉRATEURS, DÉBOUEURS

ВОЗДУХООТВОДЧИКИ, ДЕАЭРАТОРЫ, ГРЯЗЕСБОРНИКИ

SUPAPE DE EVACUARE A AERULUI, DEZAERATOARE, ELIMINATOARE DE NĂMOLURI

VÁLVULAS DE PURGA DE AIRE, DESAIREADORES, DESFANGADORES

ENTLÜFTUNGSVENTILE, ENTLÜFTER, SCHLAMMABSCHEIDER

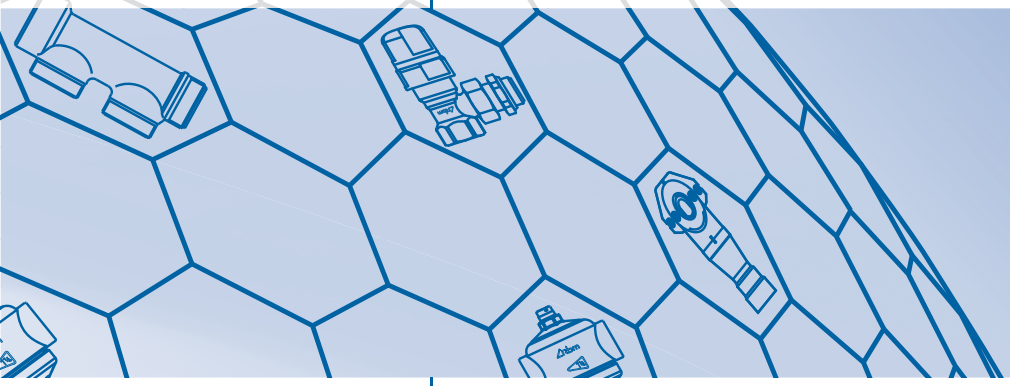

Air vents

Deaerators

Dirt separators

Magnetic dirt separators

Manual air purge and venting valve

791

Automatic air venting valve for small and medium circuits complete with manual closing pawl.
Float operated.

Polymer body.
Polymer cap unit.
Float in PP.
Stainless steel AISI 302 spring.
Seals in ethylene-propylene elastomer and nitrile elastomer.
Threaded connection M UNI-EN-ISO 228.

- Max operating pressure 600 kPa
- Max Nominal Pressure tolerable 1000 kPa
- Max operating discharge pressure 400 KPa
- Max temperature 100 °C
- Usable fluid water - water+glycol 30%

■ Technical drawing, page 11.03

MAXIMUM DISCHARGE PRESSURE 4 bar

Miniluft CP Techno-polymer automatic air venting valve
Miniluft CP Vanne automatique d'échappement de l'air en polymère
Miniluft CP Автоматическая отдушина воздуха из полимера
Miniluft CP Robinet automat de aerisire din polimer
Miniluft CP Purgador automático de aire de polímero
Miniluft CP Automatisches Luftablassventil aus Polymer

Code Code Артикул Cod Código Code	Size Taille Размер Dimensiune Medida Abmessung	Model Modèle Модель Model Modelo Modell	EURO EURO EURO EURO EURO EURO	Pack Cond. Уп-ка Ambalaj Caja Verp.
791.03.40	3/8"	Miniluft CP	-	1
791.04.40	1/2"	Miniluft CP	-	1

product in preparation

019

2827

Automatic air venting valve for smaller systems, provided with manual locking cams.
Side Discharge.
Float operated.

Brass body.
Float in PP.
Stainless steel AISI 302 spring.
Seals in ethylene-propylene elastomer and nitrile elastomer.
Threaded connection M UNI-EN-ISO 228.

- Max operating pressure 1000 kPa
- Max operating discharge pressure 400 kPa
- Max temperature 115°C
- Usable fluid water - water+glycol 30%

■ Technical drawing, page 11.04

MAXIMUM DISCHARGE PRESSURE 4 bar

Minifult Compact Automatic air venting valve with lateral discharge
Miniluft Compact Vanne automatique de purge d'air réduite décharge latérale
Miniluft Compact Компактный автоматический воздуоотводчик с боковым сбросом
Miniluft Compact Supapă automată de evacuare a aerului, cu reducție și evacuare laterală
Miniluft Compact Válvula automática de purga de aire reducida descarga lateral
Miniluft Compact Automatisches reduziertes Entlüftungsventil mit seitlichem Auslass

Code Code Артикул Cod Código Code	Size Taille Размер Dimensiune Medida Abmessung	Model Modèle Модель Model Modelo Modell	EURO EURO EURO EURO EURO EURO	Pack Cond. Уп-ка Ambalaj Caja Verp.
2827.03.00	3/8"	Miniluft Compact	-	1

New

Compact!

019

2828

Automatic air venting valve for smaller systems, provided with manual locking cams.
Vertical Discharge.
Float operated.

Brass body.
Float in PP.
Stainless steel AISI 302 spring.
Seals in ethylene-propylene elastomer and nitrile elastomer.
Threaded connection M UNI-EN-ISO 228.

- Max operating pressure 1000 kPa
- Max operating discharge pressure 600 kPa
- Max temperature 115°C
- Usable fluid water - water+glycol 30%

■ Technical drawing, page 11.04

MAXIMUM DISCHARGE PRESSURE 6 bar

Minifult Automatic air venting valve with vertical discharge
Miniluft Vanne automatique de purge d'air réduite décharge verticale
Miniluft Компактный автоматический воздуоотводчик с вертикальным сбросом
Miniluft Supapă automată de evacuare a aerului, cu reducție și evacuare verticală
Miniluft Válvula automática de purga de aire reducida descarga vertical
Miniluft Automatisches reduziertes Entlüftungsventil mit vertikalem Auslass

Code Code Артикул Cod Código Code	Size Taille Размер Dimensiune Medida Abmessung	Model Modèle Модель Model Modelo Modell	EURO EURO EURO EURO EURO EURO	Pack Cond. Уп-ка Ambalaj Caja Verp.
2828.03.00	3/8"	Miniluft	-	1
2828.04.00	1/2"	Miniluft	-	1

New

Vertical discharge.

019

37

Automatic air venting valve, degasser. Float operated.

Nickel-plated brass body.
Float and the lever in PP.
Stainless steel AISI 302 spring.
Seals in ethylene-propylene elastomer and nitrile elastomer.
Threaded connection M UNI-EN-ISO 228.

- Max pressure 600 kPa
- Max temperature 100°C
- Usable fluid water - water+glycol 30%

■ Technical drawing, page 11.04

Vasa Degasser automatic air venting valve with protective cap
Vasa Vanne automatique de purge d'air dégazeur avec capuchon de protection
Vasa Автоматический воздуоотводчик с защитным колпачком
Vasa Supapă automată de evacuare a aerului degazator cu capișon de protecție
Vasa Purgador automático – desgasificador de aira
Vasa Automatisches Ventil zum Luftabzug Entgaser mit Schutzkappe

Code Code Артикул Cod Código Code	Size Taille Размер Dimensiune Medida Abmessung	Model Modèle Модель Model Modelo Modell	EURO EURO EURO EURO EURO EURO	Pack Cond. Уп-ка Ambalaj Caja Verp.
37.03.60	3/8″	Vasa	-	10
37.04.60	1/2″	Vasa	-	10
37.05.60	3/4″	Vasa	-	10
37.06.60	1″	Vasa	-	10

Notes: To be installed on circuits with positive pumping pressures. For circuits with negative pumping pressures, always provide the manual shut-off of the component by applying a suitable ball valve.

Replaceable float unit.
Cod. 891.00.00 See spare parts pricelist.

2840

Automatic air venting valve, degasser. Float operated.

Brass body
Float and the lever in PP.
Stainless steel AISI 302 spring.
Seals in ethylene-propylene elastomer and nitrile elastomer.
Threaded connection M UNI-EN-ISO 228.

- Max operating pressure 1000 kPa
- Max operating discharge pressure 500 kPa
- Max temperature 115°C
- Usable fluid water - water+glycol 30%

■ Technical drawing, page 11.04

Megaluft Air venting automatic valve great capacity
Megaluft Vanne automatique de purge d'air de grande capacité
Megaluft Автоматический воздуоотводчик большой производительности
Megaluft Supapă automată de evacuare a aerului de mare capacitate
Megaluft Válvula automática de purga de aire de gran capacidad
Megaluft Automatisches Entlüftungsventil mit hoher Kapazität

Code Code Артикул Cod Código Code	Size Taille Размер Dimensiune Medida Abmessung	Model Modèle Модель Model Modelo Modell	EURO EURO EURO EURO EURO EURO	Pack Cond. Уп-ка Ambalaj Caja Verp.
2840.03.00	3/8″	Megaluft	-	1
2840.04.00	1/2″	Megaluft	-	1

MAXIMUM DISCHARGE PRESSURE 5 bar

New

38

Check valve for automatic shut-off of air venting valves, models Vasa, Miniluft and Megaluft.

Nickel plated brass body.
Seals in ethylene-propylene elastomer
In-line threaded connections MF UNI-EN-ISO 228.

- Max pressure 600 kPa (without air venting valve)
- Max temperature 100 °C

■ Technical drawing, page 11.04

Check valve
Clapet de retenue
Отсекающий клапан
Supapă de reținere
Válvula de interceptación (retención) para purgador automático de aire
Rückschlagventil

Code Code Артикул Cod Código Code	Size Taille Размер Dimensiune Medida Abmessung	EURO EURO EURO EURO EURO EURO	Pack Cond. Уп-ка Ambalaj Caja Verp.
38.04.10	1/2″ F x 1/2″ M	-	10

One way valve with pre-treated threading
Clapet de retenue avec filetage pré-garni
Отсекающий клапан с предварительно уплотнённой резьбой
Supapă de reținere cu filet cu garnitură
Válvula de retención con rosca precubierta
Rückschlagventil mit vor-gedichtetem Gewinde

Code Code Артикул Cod Código Code	Size Taille Размер Dimensiune Medida Abmessung	EURO EURO EURO EURO EURO EURO	Pack Cond. Уп-ка Ambalaj Caja Verp.
38.03.70	3/8″ F x 3/8″ M	-	10
38.04.70	3/8″ F x 1/2″ M	-	10

100% MADE IN ITALY

216

Automatic air venting valve, degasser, complete with integrated venting valve and hose connection, pressure gauge connection. Float operated.

Nickel plated brass body.
Float and lever in PP.
Seals in ethylene-propylene elastomer and nitrile elastomer.
Threaded angle connection M UNI-EN-ISO 228.
Pressure gauge connection F G1/4.

- Max pressure 600 kPa
- Max temperature 100 °C
- Usable fluid water / water+glycol 30%

■ Technical drawing, page 11.05

VasaTre Automatic angular connection air venting valve with protective cap

VasaTre Vanne automatique de dégazage raccord en angle avec capuchon de protection

VasaTre Автоматический воздуоотводчик с защитным колпачком

VasaTre Supapă automată de evacuare a aerului prindere cu cot cu capişon de protecţie

VasaTre Purgador automático de aire con válvula llenado/vaciado, conexión escuadra

VasaTre Automatisches Ventil zum Luftabzug Winkelanschluss mit Schutzkappe

Code Code Артикул Cod Código Code	Size Taille Размер Dimensiune Medida Abmessung	Model Modèle Модель Model Modelo Modell	EURO EURO EURO EURO EURO EURO	Pack Cond. Уп-ка Ambalaj Caja Verp.
216.05.60	3/4"	VasaTre	-	3
216.06.60	1"	VasaTre	-	3
216.07.60	1"1/4	VasaTre	-	3

Notes: To be installed on circuits with positive pumping pressures.
Assembly on horizontally developed manifolds and pipes.

Replaceable float unit.
Cod. 891.00.00 See spare parts pricelist.

2836

Deaerator with big discharge capacity. Float operated.

Brass body.
Float and lever in PP.
Stainless steel AISI 302 spring.
Seals in ethylene-propylene elastomer and nitrile elastomer.
Threaded connection M UNI-EN-ISO 228.

- Max operating pressure 1000 kPa
- Max operating discharge pressure 1000 kPa
- Max temperature 115°C
- Usable fluid water - water+glycol 30%

■ Technical drawing, page 11.04

Megafult HP Deaerator with high discharge capacity

Megaluft HP Désaérateur avec une grande capacité de décharge

Megaluft HP Деаэратор большой производительности

Megaluft HP Dezaerator cu mare capacitate de sarcină

Megaluft HP desaireador con gran capacidad de descarga

Megaluft HP Leistungsstarker Entlüfter

Code Code Артикул Cod Código Code	Size Taille Размер Dimensiune Medida Abmessung	Model Modèle Модель Model Modelo Modell	EURO EURO EURO EURO EURO EURO	Pack Cond. Уп-ка Ambalaj Caja Verp.
2836.04.00	1/2"	Megaluft HP	-	1

MAXIMUM DISCHARGE PRESSURE 10 bar

New

100% MADE IN ITALY

2830

Line deaerator.
Float operated.

Brass body.
Float and lever in PP.
Stainless steel INOX AISI 302 spring.
INOX AISI 304 3Layers cartridge.
Seals in elastomer ethylene-propylene and nitrile elastomer.
In line threaded connections F UNI-EN-ISO 228.

- Max operating pressure 1000 kPa
- Max operating discharge pressure 1000 kPa
- Max temperature 110°C
- Usable fluid water - water+glycol 30%

■ Technical drawing, page 11.05

Airterm In-line deaerator
Airterm Désaérateur en ligne
Airterm Поточный деаэратор
Airterm Dezaerator drept
Airterm Desaireador en línea
Airterm Entlüfter für Leitungen

Code Code Артикул Cod Código Code	Size Taille Размер Dimensiune Medida Abmessung	Model Modèle Модель Model Modelo Modell	EURO EURO EURO EURO EURO EURO	Pack Cond. Уп-ка Ambalaj Caja Verp.
2830.04.00	1/2"	Airterm	-	1
2830.05.00	3/4"	Airterm	-	1
2830.06.00	1"	Airterm	-	1
2830.07.00	1"1/4	Airterm	-	1
2830.08.00	1"1/2	Airterm	-	1
2830.09.00	2"	Airterm	-	1

MAXIMUM DISCHARGE PRESSURE 10 bar

New

019

2649

Adjustable deaerator.
Float operated.

Brass body
Float and lever in PP.
INOX AISI 302 spring.
INOX AISI 304 cartridge.
Elastomer ethylene-propylene seals and nitrile elastomer.
F UNI-EN-ISO 228 threaded fittings.

- Max operating pressure 1000 kPa
- Max operating discharge pressure 1000 kPa
- Max temperature 115°C
- Usable fluid water - water+glycol 30%

■ Technical drawing, page 11.05

Airterm UP Adjustable deaerator
Airterm UP Désaérateur orientable
Airterm UP Поворотный деаэратор
Airterm UP Dezaerator reglabil
Airterm UP Desaireador orientable
Airterm UP Schwenkbarer Entlüfter

Code Code Артикул Cod Código Code	Size Taille Размер Dimensiune Medida Abmessung	Model Modèle Модель Model Modelo Modell	EURO EURO EURO EURO EURO EURO	Pack Cond. Уп-ка Ambalaj Caja Verp.
2649.05.00	3/4"	Airterm UP	-	1
2649.06.00	1"	Airterm UP	-	1

New

MAXIMUM DISCHARGE PRESSURE 10 bar

Can be mounted on vertical, horizontal and diagonal piping.

019

37

Large capacity automatic air venting valve, degasser, with channel discharge.
Float operated.

Nickel plated brass body.
Float in PP.
Seals in elastomer ethylene-propylene and nitrile elastomer.
Threaded connections FF UNI-EN-ISO 228.
Channelled air discharge F G 1/2".

- Max pressure 600 KPa
- Max operating discharge pressure 300 KPa
- Max temperature 100°C
- Usable fluid water - water+glycol 30%

■ Technical drawing, page 11.05

VasaSette Degasser automatic air venting valve with protective cap
VasaSette Vanne automatique de purge d'air dégazeur avec capuchon de protection
VasaSette Автоматический воздуоотводчик с защитным колпачком
VasaSette Supapă automată de evacuare a aerului degazator cu capişon de protecţie
VasaSette Purgador automático - desgasificador de aire "Vasasette", de gran capacidad
VasaSette Automatisches Ventil zum Luftabzug Entgaser mit Schutzkappe

Code Code Артикул Cod Código Code	Size AxB Dimension AXB Размер AxB Dimensiune AxB Medida AxB Abmessung AxB	Model Modèle Модель Model Modelo Modell	EURO EURO EURO EURO EURO EURO	Pack Cond. Уп-ка Ambalaj Caja Verp.
37.05.70	3/4" x 1/2"	VasaSette	-	1

Large capacity discharge.

Channelled venting valve.

MAXIMUM DISCHARGE PRESSURE 3 bar

019

100% MADE IN ITALY

2829

Self-cleaning dirt separator.
Provided with drain ball valve with hose end connector.

Nickel plated brass body
3 Layers INOX AISI 304 filtering cartridge
EPDM hydraulic seals
Threaded connections FF UNI-EN-ISO 228

- Max pressure 1000 kPa
- Operating temperature 0÷110 °C

■ Technical drawing, page 11.06

Dirterm Self-cleaning dirt separator
Dirterm Déboueur autonettoyant
Dirterm Самоочищающийся грязесборник
Dirterm Eliminator de nămoluri cu autocurăţare
Dirterm Desfangador autolimpiante
Dirterm Selbstreinigender Schlammabscheider

Code Code Артикул Cod Código Code	Size Taille Размер Dimensiune Medida Abmessung	Kvs (m^3/h) Kvs (m^3/h) Kvs ($м^3$/ч) Kvs (m^3/h) Kvs (m^3/h) Kvs (m^3/h)	EURO EURO EURO EURO EURO EURO	Pack Cond. Уп-ка Ambalaj Caja Verp.
2829.04.00	1/2″	-	-	1
2829.05.00	3/4″	-	-	1
2829.06.00	1″	-	-	1
2829.07.00	1″1/4	-	-	1
2829.08.00	1″1/2	-	-	1
2829.09.00	2″	-	-	1

New

2831

Self-cleaning dirt separator / deaerator.
Float operated deaerator.
Provided with drain ball valve with hose connection.

Brass body.
Lever floating device in PP.
INOX AISI 304 3 Layers steel filtering cartridge.
EPDM hydraulic seals.
FF UNI-EN-ISO 228 threaded fittings.

- Max operating pressure 1000 kPa
- Max operating discharge pressure 1000 kPa
- Operating temperature 0÷110 °C

■ Technical drawing, page 11.06

Airterm Dirt Self-cleaning dirt separator / deaerator
Airterm Dirt Déboueur autonettoyant/désaérateur
Airterm Dirt Самоочищающийся грязесборник/ Деаэратор
Airterm Dirt Eliminator de nămoluri cu autocurăţare/Dezaerator
Airterm Dirt Desfangador autolimpiante / desaireador
Airterm Dirt Selbstreinigender Schlammabscheider / Entlüfter

Code Code Артикул Cod Código Code	Size Taille Размер Dimensiune Medida Abmessung	Kvs (m^3/h) Kvs (m^3/h) Kvs ($м^3$/ч) Kvs (m^3/h) Kvs (m^3/h) Kvs (m^3/h)	EURO EURO EURO EURO EURO EURO	Pack Cond. Уп-ка Ambalaj Caja Verp.
2831.04.00	1/2″	-	-	1
2831.05.00	3/4″	-	-	1
2831.06.00	1″	-	-	1
2831.07.00	1″1/4	-	-	1

New

MAXIMUM DISCHARGE PRESSURE 10 bar

Dirt separator + embedded deaerator

100% MADE IN ITALY

MAG-NUS

SELF-CLEANING DIRT SEPARATOR WITH MAGNET FOR HYDRAULIC CIRCUITS

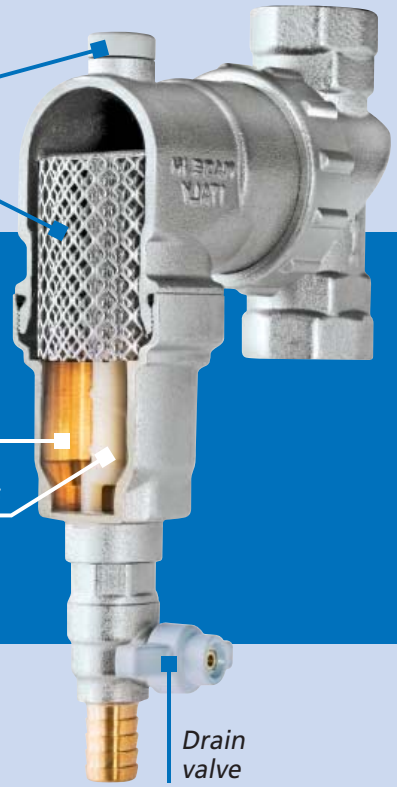

RBM MAG-NUS is a self-cleaning dirt separator with magnet suitable for hydraulic systems. It is an extremely innovative product created to remove any type of impurity from heating systems.

RBM MAG-NUS is the best solution to solve problems caused by particle pollution, especially rust and sand, formed by corrosion.
This device helps maintaining the high efficiency of the system, preventing pipe obstruction and boiler failures.
Through its effective action, the magnet attracts iron particles avoiding damages caused by free movements of these into the system.

Impurities (iron, rust, sand, seaweeds) collected in the filter can be removed through the drain valve.

RBM MAG-NUS must be installed with the drain valve pointing to the bottom.

RBM MAG-NUS SUMMARY:

- Removes any impurity
- Self-cleaning
- Excellent hydraulic properties
- Can be mounted on vertical, horizontal and diagonal piping
- Extends boiler lifespan
- Fights corrosion
- Ensures system efficiency
- Limited overall dimensions

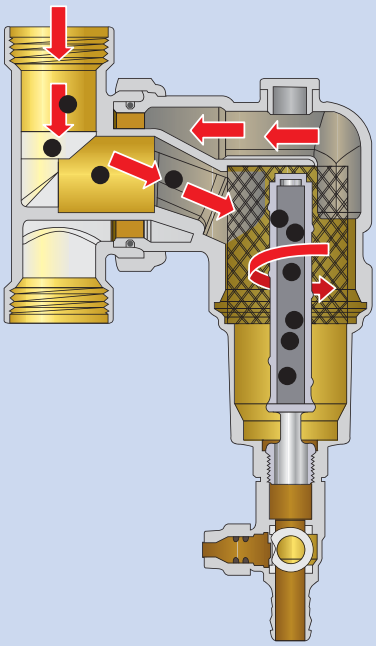

Thanks to the telescopic mounting ring nut, it is easy to fast install MAG-NUS in any position:

- STRAIGHT
- VERTICAL
- DIAGONAL

In the upper part there is a female connection G 3/8" that can be used to connect also an automatic air vent valve RBM CODE 37.03.60 or a pressure gauge. The air vent valve removes continuously the air introduced during the filling phase or the micro bubbles created during system life operation.

100% MADE IN ITALY

2098

Magnetic self-cleaning dirt separator for hydraulic circuits.

Nickel plated brass body
Stainless steel AISI 304 filtering cartridge
EPDM hydraulic seals
Threaded connections FF UNI-EN-ISO 228

- Max pressure 1000 kPa
- Operating temperature 0÷100 °C
- Max temperature 130 °C
- Neodymium magnet B = 11000 gauss
- B(T max) / B(T amb)* < 1%
  * T max = 130°C - T amb = 21°C

■ Technical drawing, page 11.06

Mag-nus Magnetic self-cleaning dirt separator for hydraulic circuits

Mag-nus Filtre séparateur de boue autonettoyant magnétique pour circuits hydrauliques

Mag-nus Самоочищающийся магнитный фильтр для систем водоснабжения

Mag-nus Filtru eliminator de nămoluri cu autocurățare magnetic pentru circuite hidraulice

Mag-nus Filtro magnético autolimpiante para instalaciones con circuito cerrado

Mag-nus Selbstreinigender Magnetfilter Schlammbeseitiger für Hydraulikkreisläufe

Code Code Артикул Cod Código Code	Size Taille Размер Dimensiune Medida Abmessung	Kvs (m^3/h) Kvs (m^3/h) Kvs ($м^3$/ч) Kvs (m^3/h) Kvs (m^3/h) Kvs (m^3/h)	EURO EURO EURO EURO EURO EURO	Pack Cond. Уп-ка Ambalaj Caja Verp.
2098.05.00	3/4″	9,50	-	1
2098.06.00	1″	10,30	-	1

- Eliminates all impurities, Self-cleaning, Excellent hydraulic features, Assembly on vertical horizontal diagonal pipes, Lengthens the life of boilers, Fights corrosion, Keeps the system efficient, Compact

026

2319

Multipurpose polymer magnetic dirt separator, with FF ball valve connection.

Plastic polymer cartridge holder body
Plastic polymer diverter valve
Stainless steel AISI 304 filtering cartridge
EPDM hydraulic seals
Threaded connections FF UNI-EN-ISO 228

- Max pressure 300 kPa
- Operating temperature 0÷90 °C
- Neodymium magnet B = 11000 gauss
- B(T max) / B(T amb)* < 1%
  * T max = 130°C - T amb = 21°C

■ Technical drawing, page 11.06

SafeCleaner Multipurpose polymer magnetic dirt separator, with FF ball valve connection

SafeCleaner Séparateur de boues magnétique multifonction en polymère, avec vannes à bille raccord FF

SafeCleaner Магнитный сепаратор шлама из полимера с металлическим девиатором со шаровыми кранами вн. - вн. резьба

SafeCleaner Separator de nămoluri magnetic multifuncțonal din polimer, cu supapă cu bilă prindere Mamă/Mamă

SafeCleaner Separador de lodos magnético multifunción con válvulas de esfera H-H, en polímero

SafeCleaner Multifunktionaler magnetischer Schlammausscheide aus Polymere mit Kugelventile Anschluss FF

Code Code Артикул Cod Código Code	Size Taille Размер Dimensiune Medida Abmessung	Kvs (m^3/h) Kvs (m^3/h) Kvs ($м^3$/ч) Kvs (m^3/h) Kvs (m^3/h) Kvs (m^3/h)	EURO EURO EURO EURO EURO EURO	Pack Cond. Уп-ка Ambalaj Caja Verp.
2319.05.50	3/4″	6,81	-	1
2319.06.50	1″	7,51	-	1

Polymer diverter valve body

Can be mounted on vertical, horizontal and diagonal piping

026

2344

Multipurpose polymer magnetic dirt separator, metal diverter valve, with FF ball valve connection.

Plastic polymer cartridge holder body
Nickel plated brass diverter valve
Stainless steel AISI 304 filtering cartridge
EPDM hydraulic seals
Threaded connections FF UNI-EN-ISO 228

- Max pressure 300 kPa
- Operating temperature 0÷90 °C
- Neodymium magnet B = 11000 gauss
- B(T max) / B(T amb)* < 1%
  * T max = 130°C - T amb = 21°C

■ Technical drawing, page 11.05

SafeCleaner Multipurpose polymer magnetic dirt separator, metal diverter valve, with FF ball valve connection

SafeCleaner Séparateur de boues magnétique multifonction en polymère, déviateur en métal, avec vannes à bille raccord FF

SafeCleaner Магнитный сепаратор шлама из полимера с металлическим девиатором со шаровыми кранами вн. - вн. резьба

SafeCleaner Separator de nămoluri magnetic multifuncțonal din polimer, deviator din metal, cu supape cu bilă prindere Mamă/Mamă

SafeCleaner Separador de lodos magnético multifunción con válvulas de esfera H-H, desviador en latón y portafiltros en polímero

SafeCleaner Multifunktionaler magnetischer Schlammausscheide aus Polymere, Metallverzweiger, mit Kugelventile Anschluss FF

Code Code Артикул Cod Código Code	Size Taille Размер Dimensiune Medida Abmessung	Kvs (m^3/h) Kvs (m^3/h) Kvs ($м^3$/ч) Kvs (m^3/h) Kvs (m^3/h) Kvs (m^3/h)	EURO EURO EURO EURO EURO EURO	Pack Cond. Уп-ка Ambalaj Caja Verp.
2344.05.50	3/4″	6,81	-	1
2344.06.50	1″	7,51	-	1

Brass diverter valve body

Can be mounted on vertical, horizontal and diagonal piping

026

100% MADE IN ITALY

2508

Thermal insulation made up from expanded polyethylene half-bearings with external antiscratch coating.

Half-bearings fixed with double-sided adhesive tape already applied.

- Fire behaviour class1
- Density 33 kg/m3
- Max operating temperature -40 +90 °C

SafeCleaner thermal insulation series 2319/2344

Isolation thermique pour filtre SafeCleaner série 2319 et 2344

Теплоизоляция для фильтра "безопасный очиститель" серии 2319 и 2344

Izolație termică pentru filtrul SafeCleaner seria 2319 și 2344

Aislamiento térmico para filtro SafeCleaner series 2319 y 2344

Wärmeisolierung für Filter Safe cleaner Serie 2319 und 2344

Code Code Артикул Cod Código Code	Size Taille Размер Dimensiune Medida Abmessung	EURO EURO EURO EURO EURO EURO	Pack Cond. Уп-ка Ambalaj Caja Verp.
2508.00.00	Universal	-	1

SafeCleaner thermal insulation series 2319/2344

041

2863

Self-cleaning dirt separator / deaerator. Provided with drain ball valve with hose end connector.

Brass body.
Lever floating device in PP.
INOX AISI 304 3 Layers steel filtering cartridge.
EPDM hydraulic seals.
FF UNI-EN-ISO 228 threaded fittings.

- Max operating pressure 1000 kPa
- Max operating discharge pressure 1000 kPa
- Operating temperature 0÷110 °C
- Neodymium magnet B = 11000 gauss

■ Technical drawing, page 11.06

Airterm Mag Self-cleaning magnetic dirt separator / deaerator

Airterm Mag Déboueur magnétique/désaérateur

Airterm Mag Магнитный грязесборник / Деаэратор

Airterm Mag Eliminator de nămoluri magnetic/Dezaerator

Airterm Mag Desfangador magnético / desaireador

Airterm Mag Magnetischer Schlammabscheider / Entlüfter

Code Code Артикул Cod Código Code	Size Taille Размер Dimensiune Medida Abmessung	Kvs (m^3/h) Kvs (m^3/h) Kvs ($м^3$/ч) Kvs (m^3/h) Kvs (m^3/h) Kvs (m^3/h)	EURO EURO EURO EURO EURO EURO	Pack Cond. Уп-ка Ambalaj Caja Verp.
2863.04.00	1/2"	-	-	1
2863.05.00	3/4"	-	-	1
2863.06.00	1"	-	-	1
2863.07.00	1"1/4	-	-	1

New

MAXIMUM DISCHARGE PRESSURE 10 bar

Magnetic dirt separator + embedded deaerator

026

2337

Magnetic self-cleaning water filter with removable filtering cartridge. Complete with dial pressure gauge and discharge ball valve with hose connection.

Nickel plated brass body.
Stainless steel 304 stretched mesh filter
Nitrile seals
Threaded connections FF UNI-EN-ISO 228

- Max operating pressure 1600 kPa
- Max operating temperature 100°C
- Pressure gauge scale 0...16 bar
- Standard filtering 8 mm
- Neodymium magnet B = 11000 gauss

■ Technical drawing, page 11.07

Magterm Magnetic self-cleaning

Magterm Filtre autonettoyant magnétique

Magterm Самоочищающийся магнитный

Magterm Filtru cu autocurățare magnetic

Magterm Filtro autolimpiante Magnético, malla extraíble en inox. con manómetro y vál. vaciado, H-H

Magterm Selbstreinigender Magnetfilter

Code Code Артикул Cod Código Code	Size Taille Размер Dimensiune Medida Abmessung	Kvs (m^3/h) Kvs (m^3/h) Kvs ($м^3$/ч) Kvs (m^3/h) Kvs (m^3/h) Kvs (m^3/h)	EURO EURO EURO EURO EURO EURO	Pack Cond. Уп-ка Ambalaj Caja Verp.
2337.06.10	1"	-	-	1
2337.07.10	1"1/4	-	-	1
2337.08.10	1"1/2	-	-	1
2337.09.10	2"	-	-	1

Magnetic filter

026

100% MADE IN ITALY

2847

Magnetic self-cleaning water filter.
Provided with drain ball valve with hose end connector.
Suitable for boiler rooms.

Plated brass body.
Magnets containment flange INOX AISI 304.
Nitrile seals.
Flanged connections PN16.

- Max operating pressure 1600 kPa
- Max operating temperature 110°C
- Neodymium magnets

Magterm XL Magnetic self-cleaning dirt separator for boiler rooms
Magterm XL Filtre autonettoyant magnétique pour installations industrielles
Magterm XL Магнитный самоочищающийся фильтр для промышленных установок
Magterm XL Filtru cu autocurățare magnetic pentru instalații industriale
Magterm XL Filtro autolimpiante magnético para instalaciones industriales
Magterm XL Magnetischer selbstreinigender Filter für Industrieanlagen

Code Code Артикул Cod Código Code	Size Taille Размер Dimensiune Medida Abmessung	Kvs (m^3/h) Kvs (m^3/h) Kvs ($м^3$/ч) Kvs (m^3/h) Kvs (m^3/h) Kvs (m^3/h)	EURO EURO EURO EURO EURO EURO	Pack Cond. Уп-ка Ambalaj Caja Verp.
2847.10.00	DN65	-	-	1
2847.11.00	DN80	-	-	1
2847.13.00	DN100	-	-	1

product in preparation

New

Magnetic filter

18

Manual air purge and venting valve.

Nickel plated brass body.
Heat resistant control knob.
Threaded connection M UNI-EN-ISO 228.

- Max pressure 600 kPa
- Max temperature 100 °C

■ Technical drawing, page 11.07

Manual air venting valve
Vanne de dégazage manuelle
Ручной воздухотводчик
Supapă manuală de refulare a aerului
Purgador manual de aire
Handventil Luftabzug

Code Code Артикул Cod Código Code	Size Taille Размер Dimensiune Medida Abmessung	EURO EURO EURO EURO EURO EURO	Pack Cond. Уп-ка Ambalaj Caja Verp.
18.01.02	1/8″	-	10
18.02.02	1/4″	-	10
18.03.02	3/8″	-	10

18

Manual air purge and venting valve, with pre-gasket thread in PTFE.

Nickel plated brass body.
Heat resistant control knob.
Threaded connection M UNI-EN-ISO 228 with pre-gasket ring in PTFE.

- Max pressure 600 kPa
- Max temperature 100 °C

■ Technical drawing, page 11.07

Manual air venting valve
Vanne de dégazage manuelle
Ручной воздухотводчик
Supapă manuală de refulare a aerului
Purgador manual de aire, orientable
Handventil Luftabzug

Code Code Артикул Cod Código Code	Size Taille Размер Dimensiune Medida Abmessung	EURO EURO EURO EURO EURO EURO	Pack Cond. Уп-ка Ambalaj Caja Verp.
18.02.52	1/4″	-	10
18.03.52	3/8″	-	10

100% MADE IN ITALY

COMPONENTS FOR HYDRO-SANITARY SYSTEMS

COMPOSANTS POUR INTALLATIONS HYDRO-SANITAIRES

КОМПОНЕНТЫ ДЛЯ СИСТЕМ ВОДОСНАБЖЕНИЯ

COMPONENTE PENTRU INSTALAȚII HIDRO-SANITARE

REDUCTORAS DE PRESIÓN Y MEZCLADORES TERMOSTÁTICOS PARA ACS

BAUTEILE FÜR BRAUCHWASSERANLAGEN

Cartridge filters

Compensated diaphragm pressure reducing valves

Compensated piston pressure reducing valves

Magnetic anti-scale device

Accessories for plumbing, heating and sanitary systems

3

Line filter with removable filtering cartridge, FF connection.
Suitable for water.

Nickel plated brass body.
Stainless steel 304 stretched mesh filter.
Nitrile seals.
Threaded connections FF UNI-EN-ISO 228.

- Max operating pressure 1600 kPa
- Max operating temperature 100 °C
- Filtering grade: 50-100-300-800 µm

■ Technical drawing, page 11.07

Line filter 800 micron ff connection

Filtre de ligne 800 microns branchement ff
Линейный фильтр 800 мкм , резьба вн.- вн.
Filtru de linie 800 microni prindere mamă/mamă
Filtro en línea, malla inox. de 800 micras, H-H
Leitungsfilter 800 Mikron Anschluss ff

Code Code Артикул Cod Código Code	Size Taille Размер Dimensiune Medida Abmessung	Kvs (m^3/h) Kvs (m^3/h) Kvs ($м^3$/ч) Kvs (m^3/h) Kvs (m^3/h) Kvs (m^3/h)	EURO EURO EURO EURO EURO EURO	Pack Cond. Уп-ка Ambalaj Caja Verp.
3.03.00	3/8″	2,60	-	10
3.04.00	1/2″	3,40	-	10
3.05.00	3/4″	5,00	-	6
3.06.00	1″	8,70	-	6
3.07.00	1″1/4	14,10	-	4
3.08.00	1″1/2	26,50	-	2
3.09.00	2″	26,50	-	2
3.10.00	2″1/2	104,70	-	1
3.11.00	3″	108,20	-	1
3.13.00	4″	111,80	-	1

Line filter 300 micron FF connection

Filtre de ligne 300 microns branchement ff
Линейный фильтр 300 мкм, резьба вн.- вн.
Filtru de linie 300 microni prindere mamă/mamă
Filtro en línea, malla inox. de 300 micras, H-H
Leitungsfilter 300 Mikron Anschluss ff

Code Code Артикул Cod Código Code	Size Taille Размер Dimensiune Medida Abmessung	Kvs (m^3/h) Kvs (m^3/h) Kvs ($м^3$/ч) Kvs (m^3/h) Kvs (m^3/h) Kvs (m^3/h)	EURO EURO EURO EURO EURO EURO	Pack Cond. Уп-ка Ambalaj Caja Verp.
3.03.10	3/8″	2,00	-	10
3.04.10	1/2″	3,30	-	10
3.05.10	3/4″	4,90	-	6
3.06.10	1″	8,40	-	6
3.07.10	1″1/4	13,70	-	4
3.08.10	1″1/2	24,40	-	2
3.09.10	2″	24,40	-	2
3.10.10	2″1/2	100,10	-	1
3.11.10	3″	101,70	-	1
3.13.10	4″	108,00	-	1

Line filter 100 micron FF connection

Filtre de ligne 100 microns branchement ff
Линейный фильтр 100 мкм, резьба вн.- вн.
Filtru de linie 100 microni prindere mamă/mamă
Filtro en línea, malla inox. de 100 micras, H-H
Leitungsfilter 100 Mikron Anschluss ff

Code Code Артикул Cod Código Code	Size Taille Размер Dimensiune Medida Abmessung	Kvs (m^3/h) Kvs (m^3/h) Kvs ($м^3$/ч) Kvs (m^3/h) Kvs (m^3/h) Kvs (m^3/h)	EURO EURO EURO EURO EURO EURO	Pack Cond. Уп-ка Ambalaj Caja Verp.
3.03.70	3/8″	2,00	-	10
3.04.70	1/2″	3,30	-	10
3.05.70	3/4″	4,90	-	6
3.06.70	1″	8,20	-	6
3.07.70	1″1/4	13,40	-	4
3.08.70	1″1/2	23,60	-	2
3.09.70	2″	23,60	-	2

Line filter 50 micron FF connection

Filtre de ligne 50 microns branchement ff
Линейный фильтр 50 мкм, резьба вн.- вн.
Filtru de linie 50 microni prindere mamă/mamă
Filtro en línea, malla inox. de 50 micras, H-H
Leitungsfilter 50 Mikron Anschluss ff

Code Code Артикул Cod Código Code	Size Taille Размер Dimensiune Medida Abmessung	Kvs (m^3/h) Kvs (m^3/h) Kvs ($м^3$/ч) Kvs (m^3/h) Kvs (m^3/h) Kvs (m^3/h)	EURO EURO EURO EURO EURO EURO	Pack Cond. Уп-ка Ambalaj Caja Verp.
3.03.20	3/8″	1,60	-	10
3.04.20	1/2″	1,90	-	10
3.05.20	3/4″	3,50	-	6
3.06.20	1″	4,30	-	6
3.07.20	1″1/4	6,60	-	4
3.08.20	1″1/2	11,20	-	2
3.09.20	2″	11,20	-	2
3.10.20	2″1/2	-	-	1
3.11.20	3″	-	-	1
3.13.20	4″	-	-	1

Replaceable filtering cartridge. See spare parts pricelist.

4

Line filter with removable filtering cartridge, MF connection.
Suitable for water.

Nickel plated brass body.
Stainless steel 304 stretched mesh filter.
Nitrile seals.
Threaded connections MF UNI-EN-ISO 228.

- Max operating pressure 1600 kPa
- Max operating temperature 100 °C
- Filtering grade: 50-100-300-800 µm

■ Technical drawing, page 11.08

Line filter 800 micron mf connection

Filtre de ligne 800 microns branchement mf
Линейный фильтр 800 мкм, резьба нар.- вн.
Filtru de linie 800 microni prindere tată/mamă
Filtro en línea, malla inox. de 800 micras, H-M
Leitungsfilter 800 Mikron Anschluss mf

Code Code Артикул Cod Código Code	Size Taille Размер Dimensiune Medida Abmessung	Kvs (m^3/h) Kvs (m^3/h) Kvs ($м^3$/ч) Kvs (m^3/h) Kvs (m^3/h) Kvs (m^3/h)	EURO EURO EURO EURO EURO EURO	Pack Cond. Уп-ка Ambalaj Caja Verp.
4.04.00	1/2″	3,40	-	10
4.05.00	3/4″	5,00	-	6
4.06.00	1″	8,70	-	6
4.07.00	1″1/4	14,1	-	4
4.08.00	1″1/2	26,5	-	2
4.09.00	2″	26,50	-	2

Line filter 300 micron mf connection

Filtre de ligne 300 microns branchement mf
Линейный фильтр 300 мкм, резьба нар.- вн.
Filtru de linie 300 microni prindere tată/mamă
Filtro en línea, malla inox. de 300 micras, H-M
Leitungsfilter 300 Mikron Anschluss mf

Code Code Артикул Cod Código Code	Size Taille Размер Dimensiune Medida Abmessung	Kvs (m^3/h) Kvs (m^3/h) Kvs ($м^3$/ч) Kvs (m^3/h) Kvs (m^3/h) Kvs (m^3/h)	EURO EURO EURO EURO EURO EURO	Pack Cond. Уп-ка Ambalaj Caja Verp.
4.04.10	1/2″	3,3	-	10
4.05.10	3/4″	4,9	-	6
4.06.10	1″	8,4	-	6
4.07.10	1″1/4	13,7	-	4
4.08.10	1″1/2	24,4	-	2
4.09.10	2″	24,4	-	2

Line filter 100 micron mf connection

Filtre de ligne 100 microns branchement mf
Линейный фильтр 100 мкм, резьба нар.- вн.
Filtru de linie 100 microni prindere tată/mamă
Filtro en línea, malla inox. de 100 micras, H-M
Leitungsfilter 100 Mikron Anschluss mf

Code Code Артикул Cod Código Code	Size Taille Размер Dimensiune Medida Abmessung	Kvs (m^3/h) Kvs (m^3/h) Kvs ($м^3$/ч) Kvs (m^3/h) Kvs (m^3/h) Kvs (m^3/h)	EURO EURO EURO EURO EURO EURO	Pack Cond. Уп-ка Ambalaj Caja Verp.
4.04.70	1/2″	3,3	-	10
4.05.70	3/4″	4,9	-	6
4.06.70	1″	8,2	-	6
4.07.70	1″1/4	13,4	-	4
4.08.70	1″1/2	23,6	-	2
4.09.70	2″	23,6	-	2

Line filter 50 micron mf connection

Filtre de ligne 50 microns branchement mf
Линейный фильтр 50 мкм, резьба нар.- вн.
Filtru de linie 50 microni prindere tată/mamă
Filtro en línea, malla inox. de 50 micras, H-M
Leitungsfilter 50 Mikron Anschluss mf

Code Code Артикул Cod Código Code	Size Taille Размер Dimensiune Medida Abmessung	Kvs (m^3/h) Kvs (m^3/h) Kvs ($м^3$/ч) Kvs (m^3/h) Kvs (m^3/h) Kvs (m^3/h)	EURO EURO EURO EURO EURO EURO	Pack Cond. Уп-ка Ambalaj Caja Verp.
4.04.20	1/2″	1,9	-	10
4.05.20	3/4″	3,5	-	6
4.06.20	1″	4,3	-	6
4.07.20	1″1/4	6,6	-	4
4.08.20	1″1/2	11,2	-	2
4.09.20	2″	11,2	-	2

Replaceable filtering cartridge. See spare parts pricelist.

858

Y-strainer with removable filtering cartridge. Suitable for water.

Brass body and cap.
Fibre sealing gaskets
Stainless steel AISI 304 stretched mesh filter.
Nitrile seals.
Threaded filters FF UNI-EN-ISO 228.

- Max operating pressure 1600 kPa
- Max operating temperature 100 °C
- Filtering grade: 100-300-800 µm

■ Technical drawing, page 11.08

Y-strainer 800 micron
Filtre en Y 800 microns
Фильтр механической очистки Y-образный 800 мкм
Filtru depurator de 800 microni
Filtro en "Y", malla extraíble en inox. de 800 micras, H-H
Y-Reinigungsfilter 800 Mikron

Code Code Артикул Cod Código Code	Size Taille Размер Dimensiune Medida Abmessung	Kvs (m^3/h) Kvs (m^3/h) Kvs (м^3/ч) Kvs (m^3/h) Kvs (m^3/h) Kvs (m^3/h)	EURO EURO EURO EURO EURO EURO	Pack Cond. Уп-ка Ambalaj Caja Verp.
858.04.12	1/2"	3,69	-	20
858.05.12	3/4"	6,57	-	12
858.06.12	1"	9,23	-	8
858.07.12	1"1/4	15,60	-	3
858.08.12	1"1/2	25,10	-	2
858.09.12	2"	38,80	-	1

Y-strainer 300 micron
Filtre en Y 300 microns
Фильтр механической очистки Y-образный 300 мкм
Filtru depurator în formă de y 300 microni
Filtro en "Y", malla extraíble en inox. de 300 micras, H-H
Y-Reinigungsfilter 300 Mikron

Code Code Артикул Cod Código Code	Size Taille Размер Dimensiune Medida Abmessung	Kvs (m^3/h) Kvs (m^3/h) Kvs (м^3/ч) Kvs (m^3/h) Kvs (m^3/h) Kvs (m^3/h)	EURO EURO EURO EURO EURO EURO	Pack Cond. Уп-ка Ambalaj Caja Verp.
858.04.02	1/2"	3,00	-	20
858.05.02	3/4"	6,53	-	12
858.06.02	1"	8,79	-	8
858.07.02	1"1/4	14,15	-	3
858.08.02	1"1/2	23,80	-	2
858.09.02	2"	36,20	-	1

Y-strainer 100 micron
Filtre en Y 100 microns
Фильтр механической очистки Y-образный 100 мкм
Filtru depurator în formă de y 100 microni
Filtro en "Y", malla extraíble en inox. de 100 micras, H-H
Y-Reinigungsfilter 100 Mikron

Code Code Артикул Cod Código Code	Size Taille Размер Dimensiune Medida Abmessung	Kvs (m^3/h) Kvs (m^3/h) Kvs (м^3/ч) Kvs (m^3/h) Kvs (m^3/h) Kvs (m^3/h)	EURO EURO EURO EURO EURO EURO	Pack Cond. Уп-ка Ambalaj Caja Verp.
858.04.72	1/2"	2,57	-	20
858.05.72	3/4"	5,74	-	12
858.06.72	1"	5,84	-	8
858.07.72	1"1/4	10,80	-	3
858.08.72	1"1/2	16,80	-	2
858.09.72	2"	28,20	-	1

Replaceable filtering cartridge. See spare parts pricelist.

126

Self-cleaning water filter with removable filtering cartridge.
Complete with dial pressure gauge and discharge ball valve with hose connection.

Nickel plated brass body.
Stainless steel 304 stretched mesh filter.
Nitrile seals.
Threaded connections FF UNI-EN-ISO 228.

- Max operating pressure 1600 kPa
- Max operating temperature 100 °C
- Pressure gauge scale 0...16 bar
- Standard filtering 100 µm

■ Technical drawing, page 11.07

Self-cleaning filter 100 micron
Filtre autonettoyant 100 microns
Самоочищающийся фильтр 100 мкм
Filtru cu autocurăţare de 100 microni
Filtro autolimpiante, malla extraíble en inox. de 100 micras, con manómetro y vál. vaciado, H-H
Selbstreinigender Filter 100 Mikron

Code Code Артикул Cod Código Code	Size Taille Размер Dimensiune Medida Abmessung	Kvs (m^3/h) Kvs (m^3/h) Kvs (м^3/ч) Kvs (m^3/h) Kvs (m^3/h) Kvs (m^3/h)	EURO EURO EURO EURO EURO EURO	Pack Cond. Уп-ка Ambalaj Caja Verp.
126.03.10	3/8"	1,8	-	1
126.04.10	1/2"	3,10	-	1
126.05.10	3/4"	5,80	-	1
126.06.10	1"	8,55	-	1
126.07.10	1"1/4	14,85	-	1
126.08.10	1"1/2	24,40	-	1
126.09.10	2"	26,10	-	1
126.10.10	2"1/2	107,80	-	1
126.11.10	3"	120,20	-	1
126.13.10	4"	129,00	-	1

Replaceable filtering cartridge. See spare parts pricelist.

2516

Self-cleaning water filter, with removable filtering cartridge and visual detection of degree of clogging, complete with double dial pressure gauge and discharge bib-cock with hose connection.

Nickel plated brass body.
Stainless steel 304 stretched mesh filter.
Nitrile seals.
Threaded union connections MM UNI-EN-ISO 228.

- Max operating pressure 1600 kPa
- Max operating temperature 100 °C
- Pressure gauge scale 0...16 bar
- Standard filtering 100 µm

■ Technical drawing, page 11.08

Self-cleaning filter with double pressure gauge 100 micron
Filtre autonettoyant à double manomètre 100 microns
Самоочищающийся фильтр с двойным манометром 100 мкм
Filtru cu autocurățare cu manometru dublu de 100 microni
Filtro autolimpiante, malla extraíble en inox. de 100 micras, con dos manómetros y vál. vaciado, M-M
Selbstreinigender Filter mit doppeltem Manometer 100 Mikron

Code Code Артикул Cod Código Code	Size Taille Размер Dimensiune Medida Abmessung	Kvs (m^3/h) Kvs (m^3/h) Kvs ($м^3$/ч) Kvs (m^3/h) Kvs (m^3/h) Kvs (m^3/h)	EURO EURO EURO EURO EURO EURO	Pack Cond. Уп-ка Ambalaj Caja Verp.
2516.04.00*	1/2"	3,10	-	1
2516.05.00*	3/4"	5,80	-	1
2516.06.00*	1"	8,55	-	1
583.07.00	1"1/4	21,00	-	1

*Compact

Replaceable filtering cartridge.
See spare parts pricelist.

51

Adjustable compensated pressure reducing valve, with double seat in stainless steel, diaphragm operated, with anti-water hammer function.

Suitable for channelling water.

Nickel plated brass body.
Stainless steel AISI 303
Nitrile seals
Threaded connections FF UNI-EN-ISO 228 (1/2" ÷ 4")
Pressure gauge connection F 1/4"

- Max upstream pressure 4000 kPa
- Max upstream pressure in compliance with standard NF 1600 kPa
- Max operating temperature 80 °C
- Default presetting 300 kPa
(only models with*)

■ Technical drawing, page 11.08

"Rinox FF" pressure reducing valve - pn 40
Réducteur de pression "Rinox ff" - pn 40
Редуктор давления "Rinox вн.- вн." - PN 40
Reductor de presiune "Rinox ff" - pn 40
Reductora de presión compensada a membrana "Rinox H-H", PN 40
Druckminderer "Rinox ff" - pn 40

Code Code Артикул Cod Código Code	Size Taille Размер Dimensiune Medida Abmessung	Model Modèle Модель Model Modelo Modell	EURO EURO EURO EURO EURO EURO	Pack Cond. Уп-ка Ambalaj Caja Verp.
51.04.70	1/2"	* Rinox	-	1
51.05.70	3/4"	* Rinox	-	1
51.06.70	1"	* Rinox	-	1
51.07.70	1"1/4	** Rinox	-	1
51.08.70	1"1/2	** Rinox	-	1
51.09.70	2"	** Rinox	-	1
51.10.70	2"1/2	** Rinox	-	1
51.11.70	3"	** Rinox	-	1
51.13.70	4"	** Rinox	-	1

(*) According to standard NF
- outlet adjustment 80÷550 kPa
- on-demand outlet adjustment 80÷700 kPa
(**) outlet adjustment 80÷700 kPa

Rinox Pressure reducer with flanged connections - pn 40
Rinox Réducteur de pression avec raccords à bride - pn 40
Rinox Редуктор давления с фланцевым креплением - PN 40
Rinox Reductor de presiune cu prinderi cu flanșe - pn 40
Rinox Reductor de presión con conexiones embridadas - pn 40
Rinox Druckminderer mit geflanschten Anschlüssen - pn 40

Code Code Артикул Cod Código Code	Size Taille Размер Dimensiune Medida Abmessung	Model Modèle Модель Model Modelo Modell	EURO EURO EURO EURO EURO EURO	Pack Cond. Уп-ка Ambalaj Caja Verp.
51.10.10	DN65	** Rinox	-	1
51.11.10	DN80	** Rinox	-	1
51.13.10	DN100	** Rinox	-	1

Outlet control 80÷700 kPa

Pre-calibrated(*) with anti-water hammer function.

51

Adjustable compensated pressure reducing valve, stainless steel double seat diaphragm operated, with anti-water hammer function. Suitable for channelling water.

Nickel plated brass body.
Stainless steel AISI 303
Nitrile seals
Threaded union connections MM UNI-EN-ISO 228.
Pressure gauge connection F 1/4"

- Max upstream pressure 4000 kPa
- Max upstream pressure in compliance with standard NF 1600 kPa
- Max operating temperature 80 °C
- Default presetting 300 kPa
(only models with*)

■ Technical drawing, page 11.09

"Rinox mm" pressure reducing valve - pn 40
Réducteur de pression "Rinox mm" - pn 40
Редуктор давления "Rinox нар.-нар" - PN 40
Reductor de presiune "Rinox mm" - pn 40
Reductora de presión compensada a membrana "Rinox MM", conexiones 3 piezas Macho, PN 40
Druckminderer "Rinox mm" - pn 40

Code Code Артикул Cod Código Code	Size Taille Размер Dimensiune Medida Abmessung	Model Modèle Модель Model Modelo Modell	EURO EURO EURO EURO EURO EURO	Pack Cond. Уп-ка Ambalaj Caja Verp.
51.04.10	1/2"	* Rinox	-	1
51.05.10	3/4"	* Rinox	-	1
51.06.10	1"	* Rinox	-	1
51.07.10	1"1/4	** Rinox	-	1
51.08.10	1"1/2	** Rinox	-	1
51.09.10	2"	** Rinox	-	1

(*) According to standard NF
- outlet adjustment 80÷550 kPa
- on-demand outlet adjustment 80÷700 kPa
(**) outlet adjustment 80÷700 kPa

021

Pre-calibrated(*) with anti-water hammer function.

111

Pressure reduction unit indicate composed of:

- Adjustable compensated pressure reducing valve, stainless steel double seat diaphragm operated, with anti-water hammer function.
- Dial pressure gauge.
- Line filter with removable and interchangeable filtering cartridge.

- Max upstream pressure of reducer 4000 kPa
- Max upstream pressure of filter 1600 kPa
- Max upstream pressure in compliance with standard NF 1600 kPa
- Max operating temperature 80 °C
- Max filtering 800 micron
- Default presetting 300 kPa (only models with*)
- Pressure gauge scale 0÷16 bar

■ Technical drawing, page 11.09

"Rinox Kit"
"Kit Rinox"
"Kit Rinox"
"Kit Rinox"
Reductora de presión compensada a membrana "Rinox H-H", Filtro en línea con malla inox. de 800 micras y Manómetro, H-H
"Bausatz Rinox"

Code Code Артикул Cod Código Code	Size Taille Размер Dimensiune Medida Abmessung	Model Modèle Модель Model Modelo Modell	EURO EURO EURO EURO EURO EURO	Pack Cond. Уп-ка Ambalaj Caja Verp.
111.04.00	1/2"	* Kit Rinox	-	1
111.05.00	3/4"	* Kit Rinox	-	1
111.06.00	1"	* Kit Rinox	-	1
111.07.00	1"1/4	** Kit Rinox	-	1
111.08.00	1"1/2	** Kit Rinox	-	1
111.09.00	2"	** Kit Rinox	-	1

(*) According to standard NF
- outlet adjustment 80÷550 kPa
- on-demand outlet adjustment 80÷700 kPa
(**) outlet adjustment 80÷700 kPa

- Certified NF (is valid only for pressure reducing valve 1/2" - 3/4")

021

Pre-calibrated(*) with anti-water hammer function

Complete reducer + pressure gauge + filter kit. Bulk packed pieces.

100% MADE IN ITALY

2848

Adjustable pressure reducer, diaphragm operated.
With inspectionable and easily interchangeable internal cartridge, complete with removable filter. Suitable for channelling water.

Nickel plated brass body (CR)
EPDM seals
Threaded connections FF UNI-EN-ISO 228
Pressure gauge connection F1/4"

- Max upstream pressure 1600 kPa
- Adjustable downstream pressure 50÷700 kPa
- Max operating temperature 80 °C
- Filtering grade 800 µm

RinoxPlus M Pressure reducer with embedded filter pn 16 - 800 µm
RinoxPlus M Réducteur de pression avec filtre incorporé pn 16 - 800 µm
RinoxPlus M Редуктор давления со встроенным фильтром PN 16 - 800 µm
RinoxPlus M Reductor de presiune cu filtru încorporat pn 16 - 800 µm
RinoxPlus M Reductor de presión con filtro incorporado pn 16 - 800 µm
RinoxPlus M Druckminderer mit eingebautem Filter pn 16 - 800 µm

Code Code Артикул Cod Código Code	Size Taille Размер Dimensiune Medida Abmessung	Model Modèle Модель Model Modelo Modell	EURO EURO EURO EURO EURO EURO	Pack Cond. Уп-ка Ambalaj Caja Verp.
2848.04.00	1/2"	RinoxPlus M	-	1
2848.05.00	3/4"	RinoxPlus M	-	1

New

Replaceable cartridge. See spare parts pricelist.

Size reducer provided with smaller-size manometer.

2909

Adjustable pressure reducer, diaphragm operated, with measuring knob.
The internal cartridge can be easily inspected and extracted; provided with extractable filter.
Suitable for water conveying.

Anti-dezincification brass body (CR)
Nitrile seals
Threaded connections MM UNI-EN-ISO 228.
Pressure gauge connection F1/4"

- Max upstream pressure 1600 kPa
- Adjustable downstream pressure 50÷700 kPa
- Max operating temperature 80°C
- Filtering grade 800 µm

RinoxPlusSmart M Pressure reducer with embedded filter and measuring knob - pn 16 - 800 µm
RinoxPlusSmart M Réducteur de pression avec filtre incorporé et manette d'étalonnage - pn 16 - 800 µm
RinoxPlusSmart M Редуктор давления со встроенным фильтром и калибровочной рукояткой - PN 16 - 800 µm
RinoxPlusSmart M Reductor de presiune cu filtru încorporat și buton rotativ de calibrare - pn 16 - 800 µm
RinoxPlusSmart M Reductores de presión con filtro incorporado y manivela de calibración - pn 16 - 800 µm
RinoxPlusSmart M Druckminderer mit eingebautem Filter und Regler - pn 16 - 800 µm

Code Code Артикул Cod Código Code	Size Taille Размер Dimensiune Medida Abmessung	Model Modèle Модель Model Modelo Modell	EURO EURO EURO EURO EURO EURO	Pack Cond. Уп-ка Ambalaj Caja Verp.
2909.04.00	1/2"	RinoxPlusSmart M	-	1
2909.05.00	3/4"	RinoxPlusSmart M	-	1
2909.06.00	1"	RinoxPlusSmart M	-	1
2909.07.00	1"1/4	RinoxPlusSmart M	-	1
2909.08.00	1"1/2	RinoxPlusSmart M	-	1
2909.09.00	2"	RinoxPlusSmart M	-	1

New

Replaceable cartridge. See spare parts pricelist.

Size reducer provided with smaller-size manometer.

100% MADE IN ITALY

87

Adjustable pressure reducing valve with single stainless steel seat and compensated piston operation.
Suitable for water channelling.

Nickel plated brass body.
Stainless steel AISI 303
Nitrile seals
Threaded connections FF UNI-EN-ISO 228
Pressure gauge connection F 1/4"

- Max upstream pressure 2500 kPa
- Adjustable downstream pressure 50÷400 kPa
- Max operating temperature 80 °C

■ Technical drawing, page 11.09

"RinoxDue FF" pressure reducing valve - pn 25

Réducteur de pression "RinoxDue ff" - pn 25

Редуктор давления "RinoxDue вн.- вн." - PN 25

Reductor de presiune "Rinox Due ff" - pn 25

Reductora de presión compensada a pistón "RinoxDue" con recipiente del muelle en polímero, H-H, PN 25

Druckminderer "RinoxDue ff" - pn 25

Code Code Артикул Cod Código Code	Size Taille Размер Dimensiune Medida Abmessung	Model Modèle Модель Model Modelo Modell	EURO EURO EURO EURO EURO EURO	Pack Cond. Уп-ка Ambalaj Caja Verp.
87.03.80	3/8"	RinoxDue	-	1
87.04.80	1/2"	RinoxDue	-	1
87.05.80	3/4"	RinoxDue	-	1

"RinoxDue Silver FF" pressure reducing valve - PN 25 - with TEA® treatment

Réducteur de pression "RinoxDue Silver ff" - pn 25 - avec traitement TEA®

RinoxDue Silver Редуктор давления с креплениями с ВНУТР.-ВНУТР. резьбой - PN 25 с обработкой TEA®

Reductor de presiune "RinoxDue Silver ff" - pn 25 – cu tratament TEA®

Reductora de presión compensada a pistón "Rinoxdue Silver", con tratamiento TEA®, H-H, PN 25

RinoxDue Silver Druckminderer mit FF - pn 25 Anschlüssen mit TEA® -Behandlung

Code Code Артикул Cod Código Code	Size Taille Размер Dimensiune Medida Abmessung	Model Modèle Модель Model Modelo Modell	EURO EURO EURO EURO EURO EURO	Pack Cond. Уп-ка Ambalaj Caja Verp.
87.03.10	3/8"	RinoxDue Silver	-	1
87.04.10	1/2"	RinoxDue Silver	-	1
87.05.10	3/4"	RinoxDue Silver	-	1

Outlet regulation 0.5÷4 Bar (with inlet pressure of 8 bar).

Default presetting 300 KPa

Regulation spring containment cap in polymer.

TEA® treatment Definition: electro-deposited alloy, very stable; it replaces the classical electrolytic nickel-chromium. It complies with the limitations imposed by the international regulations in terms of water intended for human consumption.

Features: Great corrosion resistance, both in acidic and alkaline environment and anti-magnetic properties that ensure great dezincification resistance.
It slows down the production of Limestone.
It complies with potability prerequisites.

87

Adjustable pressure reducing valve with single stainless steel seat and compensated piston operation.
Suitable for water channelling.

Nickel plated brass body.
Stainless steel AISI 303
Nitrile seals
Threaded connections FF UNI-EN-ISO 228
Pressure gauge connection F 1/4"

- Max upstream pressure 2500 kPa
- Adjustable downstream pressure 50÷700 kPa
- Max operating temperature 80 °C

■ Technical drawing, page 11.09

"RinoxDue FF" pressure reducing valve - PN 25

Réducteur de pression "RinoxDue ff" - pn 25

Редуктор давления "RinoxDue вн.- вн." - PN 25

Reductor de presiune "Rinox Due ff" - pn 25

Reductora de presión compensada a pistón "RinoxDue" con recipiente del muelle en latón, H-H, PN 25

Druckminderer "RinoxDue ff" - pn 25

Code Code Артикул Cod Código Code	Size Taille Размер Dimensiune Medida Abmessung	Model Modèle Модель Model Modelo Modell	EURO EURO EURO EURO EURO EURO	Pack Cond. Уп-ка Ambalaj Caja Verp.
87.03.70	3/8"	RinoxDue	-	1
87.04.70	1/2"	RinoxDue	-	1
87.05.70	3/4"	RinoxDue	-	1
87.06.70	1"	RinoxDue	-	1
87.07.70	1"1/4	RinoxDue	-	1
87.08.70	1"1/2	RinoxDue	-	1
87.09.70	2"	RinoxDue	-	1

RinoxDue Silver Pressure reducer with FF - pn 25 connections with TEA® treatment

RinoxDue Silver Réducteur de pression avec raccords FF - pn 25 avec traitement TEA®

RinoxDue Silver Редуктор давления с креплениями с ВНУТР.-ВНУТР. резьбой - PN 25 с обработкой TEA®

RinoxDue Silver Reductor de presiune cu prinderi Mamă/Mamă - pn 25 cu tratament TEA®

RinoxDue Silver Reductor de presión con conexiones FF - pn 25 con tratamiento TEA®

RinoxDue Silver Druckminderer mit FF - pn 25 Anschlüssen mit TEA® -Behandlung

Code Code Артикул Cod Código Code	Size Taille Размер Dimensiune Medida Abmessung	Model Modèle Модель Model Modelo Modell	EURO EURO EURO EURO EURO EURO	Pack Cond. Уп-ка Ambalaj Caja Verp.
87.03.60	3/8"	RinoxDue Silver	-	1
87.04.60	1/2"	RinoxDue Silver	-	1
87.05.60	3/4"	RinoxDue Silver	-	1
87.06.60	1"	RinoxDue Silver	-	1
87.07.60	1"1/4	RinoxDue Silver	-	1
87.08.60	1"1/2	RinoxDue Silver	-	1
87.09.60	2"	RinoxDue Silver	-	1

Outlet regulation 0.5÷7 Bar (with inlet pressure of 8 bar).

TEA® treatment Definition: electro-deposited alloy, very stable; it replaces the classical electrolytic nickel-chromium. It complies with the limitations imposed by the international regulations in terms of water water intended for human consumption.

Features: Great corrosion resistance, both in acidic and alkaline environment and anti-magnetic properties that ensure great dezincification resistance.
It slows down the production of Limestone.
It complies with potability prerequisites.

87

Adjustable pressure reducing valve with single stainless steel seat and compensated piston operation.
Suitable for water channelling.

Nickel plated brass body.
Stainless steel AISI 303
Nitrile seals
Threaded union connections MM UNI-EN-ISO 228.
Pressure gauge connection F 1/4"

- Max upstream pressure 2500 kPa
- Adjustable downstream pressure 50÷400 kPa (1/2" ÷ 3/4")
- Adjustable downstream pressure 50÷700 kPa (1" ÷ 2")
- Max operating temperature 80 °C

"RinoxDue mm" pressure reducing valve - pn 25

Réducteur de pression "RinoxDue mm" - pn 25

Редуктор давления "RinoxDue нар.-нар" - PN 25

Reductor de presiune "RinoxDue mm" - pn 25

Reductora de presión compensada a pistón "RinoxDue", conexiones 3 piezas Macho, PN 25

Druckminderer "RinoxDue mm" - pn 25

Code Code Артикул Cod Código Code	Size Taille Размер Dimensiune Medida Abmessung	Model Modèle Модель Model Modelo Modell	EURO EURO EURO EURO EURO EURO	Pack Cond. Уп-ка Ambalaj Caja Verp.
87.04.20*	1/2"	RinoxDue	-	1
87.05.20*	3/4"	RinoxDue	-	1
87.06.20	1"	RinoxDue	-	1
87.07.20	1"1/4	RinoxDue	-	1
87.08.20	1"1/2	RinoxDue	-	1
87.09.20	2"	RinoxDue	-	1

*Regulation spring containment cap in polymer

Outlet regulation 0.5÷4 Bar (1/2"÷3/4")
Outlet regulation 0.5÷7 Bar (1"÷2")
(with inlet pressure of 8 bar)

Regulation spring containment cap in polymer (1/2"÷3/4").

100% MADE IN ITALY

2718

Adjustable pressure reducing valve with single stainless steel seat and compensated piston operation.
Suitable for water channelling.

Nickel plated brass body.
Stainless steel AISI 303
Nitrile seals
Threaded union connections FF UNI-EN-ISO 228.
Pressure gauge connection F 1/4"

- Max upstream pressure 2500 kPa
- Adjustable downstream pressure 50÷400 kPa (1/2" ÷ 3/4")
- Adjustable downstream pressure 50÷700 kPa (1")
- Max operating temperature 80 °C

"RinoxDue ff" pressure reducing valve - pn 25
Réducteur de pression "RinoxDue mm" - pn 25
Редуктор давления "RinoxDue нар.-нар" - PN 25
Reductor de presiune "RinoxDue ff" - pn 25
Reductora de presión compensada a pistón "RinoxDue", conexiones 3 piezas H - PN 25
Druckminderer "RinoxDue ff" - pn 25

Code Code Артикул Cod Código Code	Size Taille Размер Dimensiune Medida Abmessung	Model Modèle Модель Model Modelo Modell	EURO EURO EURO EURO EURO EURO	Pack Cond. Уп-ка Ambalaj Caja Verp.
2718.04.00	1/2"	RinoxDue	-	1
2718.05.00	3/4"	RinoxDue	-	1
2718.06.00	1"	RinoxDue	-	1

Outlet regulation 0.5÷4 Bar (1/2"÷3/4")
Outlet regulation 0.5÷7 Bar (1")
(with inlet pressure of 8 bar)

Default presetting 300 KPa

021

288

Adjustable pressure reducing valve with single stainless steel seat and compensated piston operation.

Suitable for water channelling.

Nickel plated brass body.
Stainless steel AISI 303
Nitrile seals
Threaded connections MM UNI-EN-ISO 228
Pressure gauge connection F 1/4"

- Max upstream pressure 2500 kPa
- Adjustable downstream pressure 50÷400 kPa
- Default presetting 300 KPa
- Max operating temperature 80 °C

■ Technical drawing, page 11.10

"RinoxDue mm" pressure reducing valve - pn 25
Réducteur de pression "RinoxDue mm" - pn 25
Редуктор давления "RinoxDue нар.-нар" - PN 25
Reductor de presiune "Rinox Due mm" - pn 25
Reductora de presión compensada a pistón "RinoxDue", con recipiente del muelle en polímero M-M, PN 25
Druckminderer "RinoxDue mm" - pn 25

Code Code Артикул Cod Código Code	Size Taille Размер Dimensiune Medida Abmessung	Model Modèle Модель Model Modelo Modell	EURO EURO EURO EURO EURO EURO	Pack Cond. Уп-ка Ambalaj Caja Verp.
288.04.80	1/2"	RinoxDue	-	1
288.05.80	3/4"	RinoxDue	-	1

Outlet regulation 0.5÷4 Bar (with inlet pressure of 8 bar).

Default presetting 300 KPa

Regulation spring containment cap in polymer.

021

1139

Adjustable pressure reducing valve with single seat and compensated piston operation.
Suitable for water channelling.

Nickel plated brass body
EPDM seals
Threaded connections FF UNI-EN-ISO 228
Pressure gauge connection F1/4"

- Max upstream pressure 1500 kPa
- Adjustable downstream pressure 50÷400 kPa
- Max operating temperature 80°C

■ Technical drawing, page 11.10

"Ris" pressure reducing valve - pn 15
Réducteur de pression "Ris" - pn 15
Редуктор давления "Ris" - PN 15
Reductor de presiune "Ris" - pn 15
Reductora de presión de tamaño reducido compensada a pistón "RIS", H-H, PN 15
Druckminderer "Ris' - pn 15

Code Code Артикул Cod Código Code	Size Taille Размер Dimensiune Medida Abmessung	Model Modèle Модель Model Modelo Modell	EURO EURO EURO EURO EURO EURO	Pack Cond. Уп-ка Ambalaj Caja Verp.
1139.03.00	3/8"	Ris	-	1
1139.04.00	1/2"	Ris	-	1
1139.05.00	3/4"	Ris	-	1

Outlet regulation 0.5÷4 Bar (with inlet pressure of 8 bar).

Default presetting 300 KPa.

Compact.

Regulation spring containment cap in polymer.

021

100% MADE IN ITALY

304

Magnetic anti-scale device for physical water treatment.
Permanent annular magnets enclosed in a plastic polymer for foodstuff.

External nickel plated brass body.
Sintered ring magnet.
Nitrile seals.
Threaded connections MM UNI-EN-ISO 228 up to 2".
Threaded connections 2"1/2 FF UNI-EN-ISO 228.

- Magnetic field 700 GAUS
- Residual induction from 2300 to 3700 GAUS
- Max operating pressure 1600 kPa
- Max operating temperature 80 °C

■ Technical drawing, page 11.10

magnetic anti-scale device
Anticalcaire magnétique
Магнитный нейтрализатор
Anticalcar magnetic
Anticalcáreo magnético, 700 Gauss
Magnetischer Verkalkungsschutz

Code Code Артикул Cod Código Code	Size Taille Размер Dimensiune Medida Abmessung	Kvs (m^3/h) Kvs (m^3/h) Kvs ($м^3$/ч) Kvs (m^3/h) Kvs (m^3/h) Kvs (m^3/h)	EURO EURO EURO EURO EURO EURO	Pack Cond. Уп-ка Ambalaj Caja Verp.
304.04.00	1/2"	10,20	-	1
304.05.00	3/4"	14,80	-	1
304.06.00	1"	26,00	-	1
304.07.00	1"1/4	30,40	-	1
304.08.00	1"1/2	63,00	-	1
304.09.00	2"	74,00	-	1
304.10.00	2"1/2	125,00	-	1
304.11.00	3"	160,00	-	1
304.13.00	4"	252,00	-	1

304

Test kit to control water hardness.
Easy-to-use supplied with case.

Water hardness control test kit
Kit test de contrôle de dureté de l'eau
Набор для анализа жесткости воды
Kit test control al durității apei
Kit test control de dureza del agua
Bausatz Wasserhärtetest

Code Code Артикул Cod Código Code	EURO EURO EURO EURO EURO EURO	Pack Cond. Уп-ка Ambalaj Caja Verp.
304.00.02	-	1

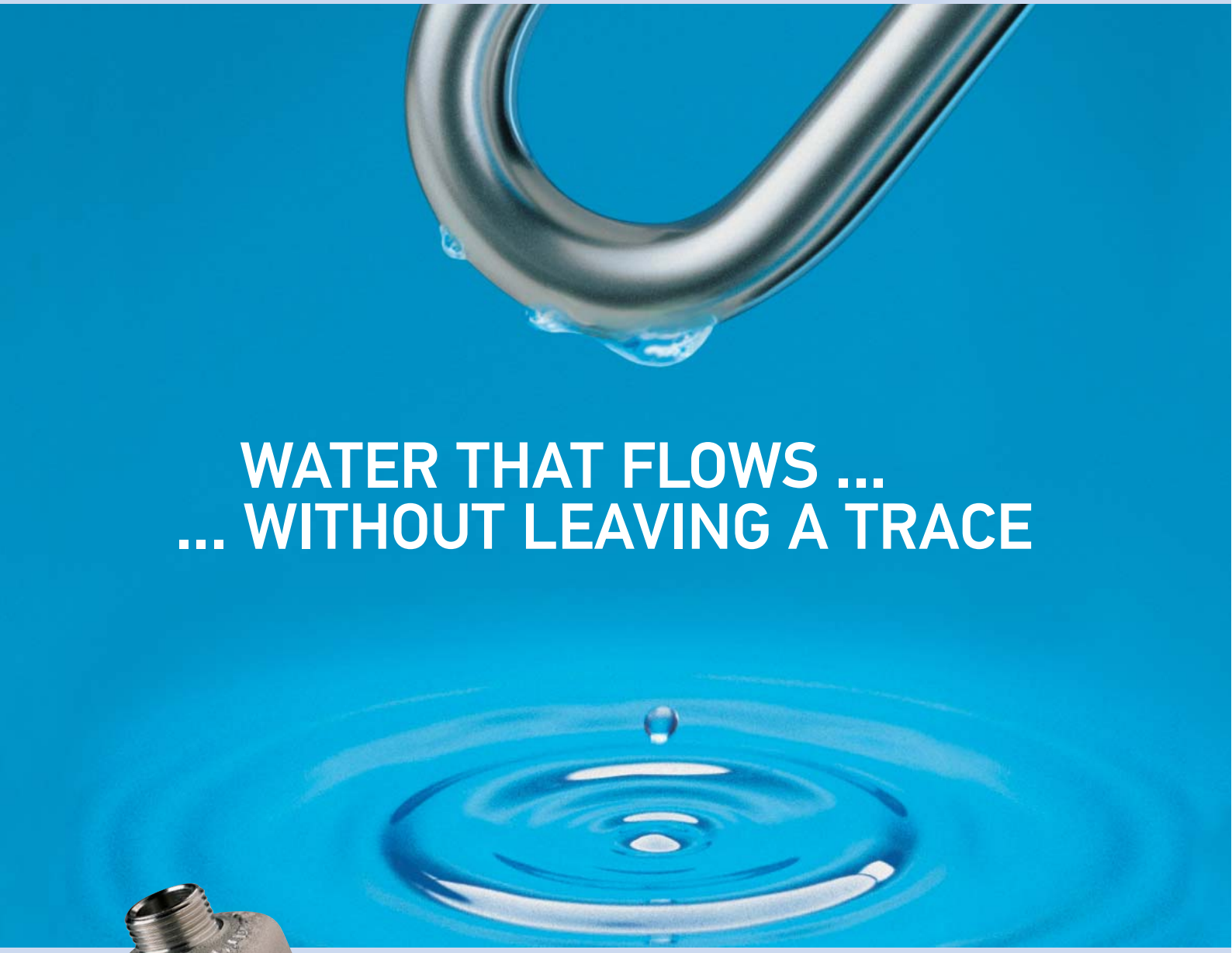

WATER THAT FLOWS ...
... WITHOUT LEAVING A TRACE

Magnetic anti-scale device

The only effective system to stop limescale and to avoid its formation.
Thanks to a simple chemical stabilization process that does not alterate water potability and does not reduce or modify the presence of alkaline elements, **RBM Magnetic anti-scale device** avoids limescale formation "stopping" it while water flows.

100% MADE IN ITALY

2133

Adjustable T-shaped thermostatic mixer for sanitary systems.

Body in anti-dezincification alloy, nickel plated CW602N (vers. 1/2" - 3/4")
Brass body CW617 (vers 1" - 1"1/4 - 1"1/2 - 2")
Stainless steel springs
EPDM sealing elements
Threaded union connections UNI-EN-ISO 228

- Max dynamic pressure 500 kPa
- Max static pressure 1000 kPa
- Max inlet temperature 85°C
- Adjustment range 30÷65°C
- Precision ±2°C

T-shaped thermostatic mixer
Mélangeur thermostatique en T
Термостатический смеситель T - образный
Vană de amestecare termostatică în formă de "T"
Mezclador termostático de ACS en "T"
Thermostatmischer T-förmig

Code Code Артикул Cod Código Code	Size Taille Размер Dimensiune Medida Abmessung	EURO EURO EURO EURO EURO EURO	Pack Cond. Уп-ка Ambalaj Caja Verp.
2133.04.00	1/2"	-	1
2133.05.00	3/4"	-	1
2133.06.00	1"	-	1
2133.07.00	1"1/4	-	1
2133.08.00	1"1/2	-	1
2133.09.00	2"	-	1

Product without removable cartridge

022

120

Threaded flange suited for connecting threaded reducers, filters and ball valves to flange distribution networks.

Nickel plated brass body
Threaded connection M UNI-EN-ISO 228
Flanged connection UNI 2223 PN 16
Flanged connection DIN 2566 PN 16
Flanged connection UNI 2223 PN 6

- Max temperature 150°C

Threaded flange - pn 16
Bride filetée - pn 16
Резьбовой фланец PN 16
Flanșă filetată - pn 16
Brida roscada, PN 16
Gewindeflansch - pn 16

Code Code Артикул Cod Código Code	Size Taille Размер Dimensiune Medida Abmessung	DN DN DN DN DN DN	EURO EURO EURO EURO EURO EURO	Pack Cond. Уп-ка Ambalaj Caja Verp.
120.04.00	1/2"	DN15	-	2
120.05.00	3/4"	DN20	-	2
120.06.00	1"	DN25	-	2
120.07.00	1"1/4	DN32	-	2
120.08.00	1"1/2	DN40	-	2
120.09.00	2"	DN50	-	2
120.10.00	2"1/2	DN65	-	1
120.11.00	3"	DN80	-	1
120.13.00	4"	DN100	-	1

Threaded flange - pn 6
Bride filetée - pn 6
Резьбовой фланец PN 6
Flanșă filetată - pn 6
Brida roscada, PN 6
Gewindeflansch - pn 6

Code Code Артикул Cod Código Code	Size Taille Размер Dimensiune Medida Abmessung	DN DN DN DN DN DN	EURO EURO EURO EURO EURO EURO	Pack Cond. Уп-ка Ambalaj Caja Verp.
121.04.00	1/2"	DN15	-	2
121.05.00	3/4"	DN20	-	2
121.06.00	1"	DN25	-	2
121.07.00	1"1/4	DN32	-	2
121.08.00	1"1/2	DN40	-	2
121.09.00	2"	DN50	-	2
121.10.00	2"1/2	DN65	-	2
121.11.00	3"	DN80	-	1
121.13.00	4"	DN100	-	1

022

1213

Radial pressure gauge Ø 50.

Pressure gauge for pressure reducing valves and self-cleaning filters.

Radial pressure gauge
Manomètre radial
Радиальный манометр
Manometru radial
Manómetro Ø 50mm conexión radial
Manometer mit Radialanschluss

Code Code Артикул Cod Código Code	Size Taille Размер Dimensiune Medida Abmessung	Scale (bar) Échelle (bar) Шкала (бар) Scală (bar) Escala (bar) Skala (bar)	EURO EURO EURO EURO EURO EURO	Pack Cond. Уп-ка Ambalaj Caja Verp.
1213.005	1/4"	0÷16	-	1

056

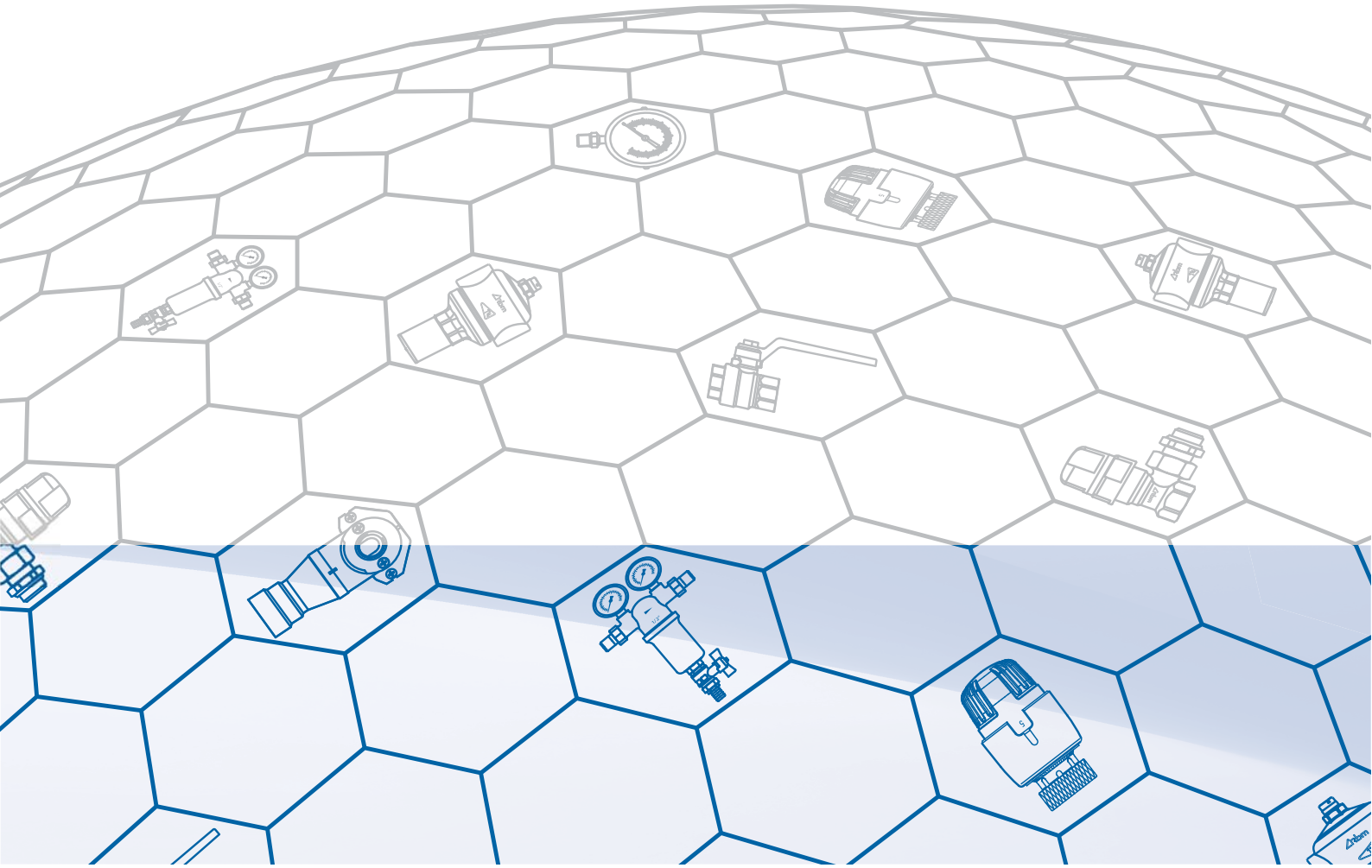

RADIATOR VALVES

VANNES POUR ÉLÉMENTS D'EXTRÉMITÉ

КЛАПАНЫ ДЛЯ РАДИАТОРОВ

SUPAPE PENTRU ELEMENTE TERMINALE

VÁLVULAS PARA ELEMENTOS TERMINALES

VENTILE FÜR ENDSTÜCKE

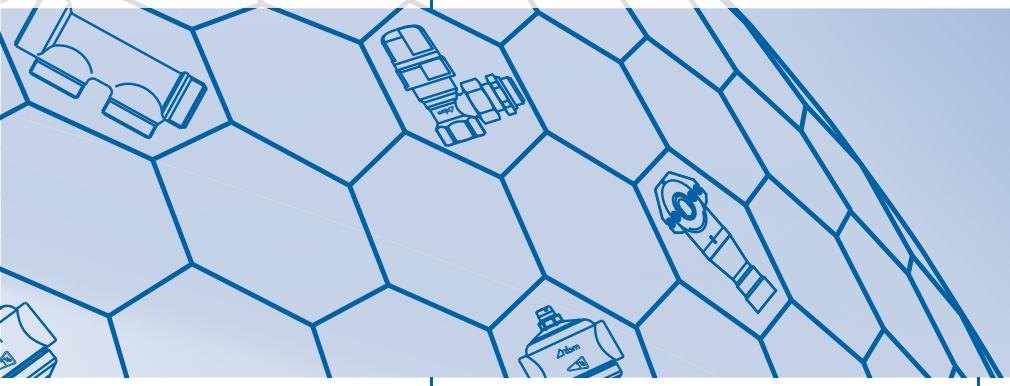

- Radiator valves with thermostatic option

- Radiator valves with thermostatic option and pre-setting

- Controls for valves with thermostatic option

- Accessories for thermostatic heads

- Manual regulating valves

- Regulating lockshields

- Double seal manual valves O.R. and lockshield valves Jet-Line series

- Valves for single and dual pipe systems

- Radiator valves kit

- Accessories for zone valves

- Valves for radiant plates

INSTALL IT AND LET IT WORK

THERMOSTATIC VALVE:

Liquid expansion thermostatic sensor. Higher Sensitivity.

Pole with vulcanized EPDM disc.
EPDM directly vulcanized on the pole disc:

- Avoids noise
- Disc does not stick on the valve seat.

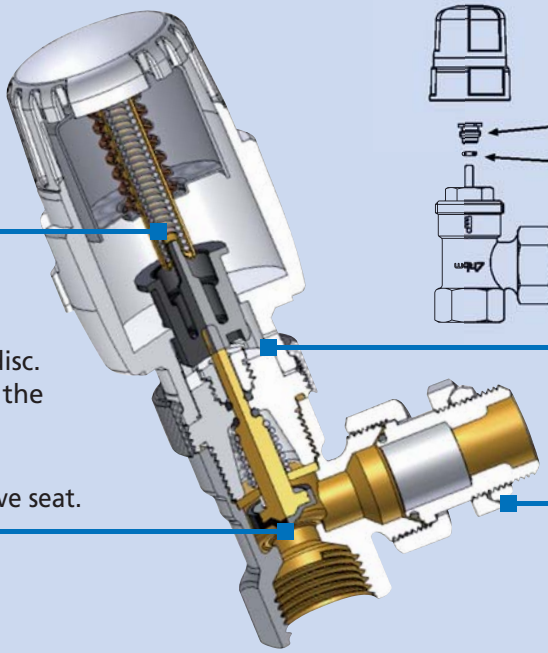

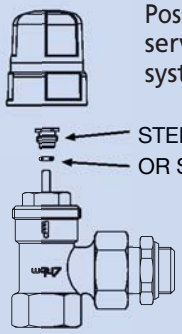

Possibility of maintenance service while system is in operation.

RFS radiator sealing made in PTFE: Water sealing vs leakage is assured for a long lasting time!

LOCKSHIELD VALVE WITH MICROMETRIC SETTING:

"Heavy" Lockshield valve

Micrometric setting!
Perfect for balancing.
KVS values (min. 9 values) can be set through the hand wheel on the top

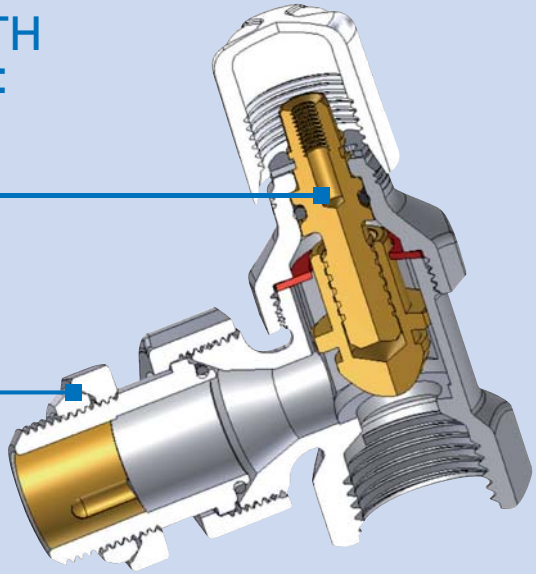

RFS radiator sealing made in PTFE: Water sealing vs leakage is assured for a long lasting time!

100% MADE IN ITALY

RBM Thermostatic valve with low Thermal Inertia

The RBM **thermostatic valves** and the **thermostatic heads** are certified in accordance with **European Standard UNI EN 215 (ED. 2007) "Thermostatic valves for radiators. Requirements and test methods"**.

The Standard conformity certifications are guaranteed by the certificates **granting use of trademark no. 43, issued by the certifying body**.

The valves' certification in accordance with Standard UNI EN 215, is the RBM thermostatic valve and head combination.

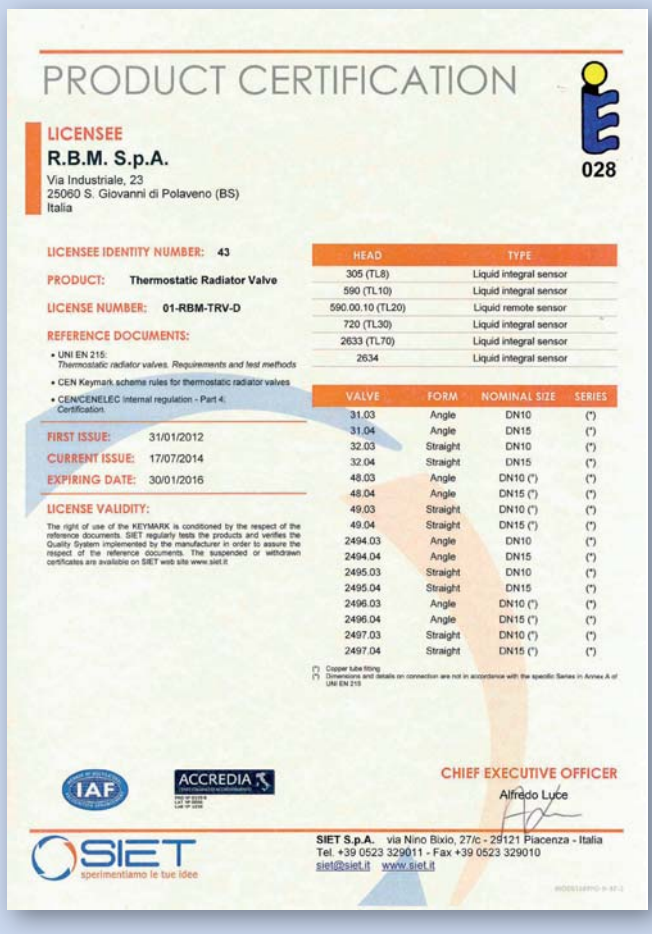

PRODUCT CERTIFICATION

028

LICENSEE
R.B.M. S.p.A.
Via Industriale, 23
25060 S. Giovanni di Polaveno (BS)
Italia

LICENSEE IDENTITY NUMBER: 43
PRODUCT: Thermostatic Radiator Valve
LICENSE NUMBER: 01-RBM-TRV-D

REFERENCE DOCUMENTS:
- UNI EN 215: *Thermostatic radiator valves. Requirements and test methods*
- CEN Keymark scheme rules for thermostatic radiator valves
- CEN/CENELEC internal regulation - Part 4: Certification.

FIRST ISSUE: 31/01/2012
CURRENT ISSUE: 17/07/2014
EXPIRING DATE: 30/01/2016

LICENSE VALIDITY:
The right of use of the KEYMARK is conditioned by the respect of the reference documents. SIET regularly tests the products and verifies the Quality System implemented by the manufacturer in order to assure the respect of the reference documents. The suspended or withdrawn certificates are available on SIET web site www.siet.it

HEAD	TYPE
305 (TL8)	Liquid integral sensor
590 (TL10)	Liquid integral sensor
590.00.10 (TL20)	Liquid remote sensor
720 (TL30)	Liquid integral sensor
2633 (TL70)	Liquid integral sensor
2634	Liquid integral sensor

VALVE	FORM	NOMINAL SIZE	SERIES
31.03	Angle	DN10	(*)
31.04	Angle	DN15	(*)
32.03	Straight	DN10	(*)
32.04	Straight	DN15	(*)
48.03	Angle	DN10 (*)	(*)
48.04	Angle	DN15 (*)	(*)
49.03	Straight	DN10 (*)	(*)
49.04	Straight	DN15 (*)	(*)
2494.03	Angle	DN10	(*)
2494.04	Angle	DN15	(*)
2495.03	Straight	DN10	(*)
2495.04	Straight	DN15	(*)
2496.03	Angle	DN10 (*)	(*)
2496.04	Angle	DN15 (*)	(*)
2497.03	Straight	DN10 (*)	(*)
2497.04	Straight	DN15 (*)	(*)

(*) Copper tube fitting
(*) Dimensions and details on connection are not in accordance with the specific Series in Annex A of UNI EN 215

IAF
ACCREDIA

CHIEF EXECUTIVE OFFICER
Alfredo Luce

SIET
sperimentiamo le tue idee

SIET S.p.A. via Nino Bixio, 27/c - 29121 Piacenza - Italia
Tel. +39 0523 329011 - Fax +39 0523 329010
siet@siet.it www.siet.it

TERMOSTATIC VALVE RBM High Energy Efficiency: Class A approved!

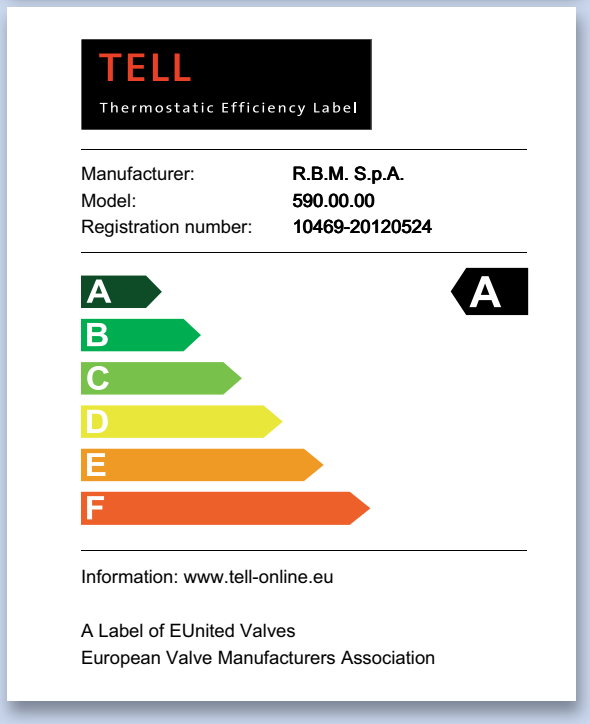

TELL
Thermostatic Efficiency Label

Manufacturer: R.B.M. S.p.A.
Model: 590.00.00
Registration number: 10469-20120524

A
B
C
D
E
F

A

Information: www.tell-online.eu

A Label of EUnited Valves
European Valve Manufacturers Association

rbm

100% MADE IN ITALY

31

Angle valve with thermostatic option for iron pipe, complying with standard UNI-EN 215.

Nickel plated brass body.
Double seal obturator.
Seals in ethylene-propylene elastomer and nitrile elastomer.
Shockproof ABS handwheel.
Threaded angled connection F UNI-EN-ISO 228 for iron pipe.
Connection to threaded terminal M UNI-EN-ISO 228 with pre-gasket ogive in PTFE (only for diameters 3/8" and 1/2" series *).

- Max temperature 110°C
- Max operating pressure 1000 kPa

■ Technical drawing, page 11.10

Angle valve with thermostatic option for iron pipe
Vanne thermostatique en angle pour tube métal
Угловой терморегулирующий клапан для железных труб
Supapă cu reglare termostatică cu cot pentru conductă din fier
Válvula termostatizable escuadra, niquelada, conexión para tubo de hierro
Mit Thermostat ausrüstbares Eckventil für Eisenrohr

Code Code Артикул Cod Código Code	Size Taille Размер Dimensiune Medida Abmessung	Kvs (m^3/h) Kvs (m^3/h) Kvs (m^3/ч) Kvs (m^3/h) Kvs (m^3/h) Kvs (m^3/h)	EURO EURO EURO EURO EURO EURO	Pack Cond. Уп-ка Ambalaj Caja Verp.
31.03.00	3/8" RFS	2,45	-	10
31.04.00	1/2" RFS	2,45	-	10
31.05.00	3/4"		-	10

Licensed use of trademark nr. 43 (3/8" - 1/2")

007

32

Straight valve with thermostatic option for iron pipe, complying with standard UNI-EN 215.

Nickel plated brass body.
Double seal obturator.
Seals in ethylene-propylene elastomer and nitrile elastomer.
Shockproof ABS handwheel.
Threaded straight connection F UNI-EN-ISO 228 for iron pipe.
Connection to threaded terminal M UNI-EN-ISO 228 with pre-gasket ogive in PTFE (only for diameters 3/8" and 1/2" series *).

- Max temperature 110°C
- Max operating pressure 1000 kPa

■ Technical drawing, page 11.11

Straight valve with thermostatic option for iron pipe
Vanne thermostatique droite pour tube métal
Прямой терморегулирующий клапан для железных труб
Supapă cu posibilitate de reglare termostatică dreaptă pentru conductă din fier
Válvula termostatizable recta, niquelada, conexión para tubo de hierro
Mit Thermostat ausrüstbares Ventil gerade für Eisenrohr

Code Code Артикул Cod Código Code	Size Taille Размер Dimensiune Medida Abmessung	Kvs (m^3/h) Kvs (m^3/h) Kvs (m^3/ч) Kvs (m^3/h) Kvs (m^3/h) Kvs (m^3/h)	EURO EURO EURO EURO EURO EURO	Pack Cond. Уп-ка Ambalaj Caja Verp.
32.03.00	3/8" RFS	1,60	-	10
32.04.00	1/2" RFS	1,60	-	10
32.05.00	3/4"		-	10

Licensed use of trademark nr. 43 (3/8" - 1/2")

007

48

Angle valve with thermostatic option for copper or polyethylene pipe, complying with standard UNI-EN 215.

Nickel plated brass body.
Double seal obturator.
Seals in ethylene-propylene elastomer and nitrile elastomer.
Shockproof ABS handwheel.
Threaded angled M standard RBM connection for copper, polyethylene, multi-layer pipe fittings.
Connection to threaded terminal M UNI-EN-ISO 228 with pre-gasket ogive in PTFE (series *).

- Max temperature 110°C
- Max operating pressure 1000 kPa

■ Technical drawing, page 11.11

Angle valve with thermostatic option for copper or polyethylene pipe
Vanne thermostatique en angle pour tube cuivre ou polyéthylène
Угловой терморегулирующий клапан для медных и полиэтиленовых труб
Supapă cu posibilitate de reglare termostatică cu cot pentru conductă din cupru sau polietilenă
Válvula termostatizable escuadra, niquelada, conexión adaptador Standard RBM para tubo de cobre, polietileno y multicapa
Mit Thermostat ausrüstbares Eckventil für Kupfer- oder Polyethylenrohr

Code Code Артикул Cod Código Code	Size Taille Размер Dimensiune Medida Abmessung	Kvs (m^3/h) Kvs (m^3/h) Kvs (m^3/ч) Kvs (m^3/h) Kvs (m^3/h) Kvs (m^3/h)	EURO EURO EURO EURO EURO EURO	Pack Cond. Уп-ка Ambalaj Caja Verp.
48.03.00	3/8" RFS	2,45	-	10
48.04.00	1/2" RFS	2,45	-	10

Licensed use of trademark nr. 43 (3/8" - 1/2")

007

Use fittings with Standard RBM thread (see page 10.00) for the pipe connections.

100% MADE IN ITALY

49

Thermostatic straight valve for copper or polyethylene pipe, complying with standard UNI-EN 215.

Nickel plated brass body.
Double seal obturator.
Seals in ethylene-propylene elastomer and nitrile elastomer.
Shockproof ABS handwheel.
Threaded straight M standard RBM connection for copper, polyethylene, multi-layer pipe fittings.
Connection to threaded terminal M UNI-EN-ISO 228 with pre-gasket ogive in PTFE (series *).

- Max temperature 110°C
- Max operating pressure 1000 kPa

■ Technical drawing, page 11.11

007

028

Straight valve with thermostatic option for copper or polyethylene pipe

Vanne thermostatique droite pour tube cuivre ou polyéthylène

Прямой терморегулирующий клапан для медных и полиэтиленовых труб

Supapă cu posibilitate de reglare termostatică dreaptă pentru conductă din cupru sau polietilenă

Válvula termostatizable recta, niquelada, conexión adaptador Standard RBM para tubo de cobre, polietileno y multicapa

Mit Thermostat ausrüstbares Ventil gerade für Kupfer- oder Polyethylenrohr

Code Code Артикул Cod Código Code	Size Taille Размер Dimensiune Medida Abmessung	Kvs (m^3/h) Kvs (m^3/h) Kvs ($м^3$/ч) Kvs (m^3/h) Kvs (m^3/h) Kvs (m^3/h)	EURO EURO EURO EURO EURO EURO	Pack Cond. Уп-ка Ambalaj Caja Verp.
49.03.00	3/8" RFS	1,60	-	10
49.04.00	1/2" RFS	1,60	-	10

Licensed use of trademark nr. 43 (3/8" - 1/2")

Use fittings with Standard RBM thread (see page 10.00) for the pipe connections.

179

Inverse angle valve with thermostatic option for iron pipe.

Nickel plated brass body.
Double seal obturator.
Seals in ethylene-propylene elastomer and nitrile elastomer.
Shockproof ABS handwheel.
Threaded angled connection F UNI-EN-ISO 228 for iron pipe.
Connection to threaded terminal M UNI-EN-ISO 228 with pre-gasket ogive in PTFE.

- Max temperature 110°C
- Max operating pressure 1000 kPa

■ Technical drawing, page 11.11

007

Inverse angle valve with thermostatic option for iron pipe

Vanne thermostatique inversée pour tube métal

Осевой терморегулирующий клапан для железных труб

Supapă cu opțiune de reglare termostatică inversă pentru conductă din fier

Válvula termostatizable inversa, niquelada, conexión para tubo de hierro

Mit Thermostat ausrüstbares Umkehrventil für Eisenrohr

Code Code Артикул Cod Código Code	Size Taille Размер Dimensiune Medida Abmessung	Kvs (m^3/h) Kvs (m^3/h) Kvs ($м^3$/ч) Kvs (m^3/h) Kvs (m^3/h) Kvs (m^3/h)	EURO EURO EURO EURO EURO EURO	Pack Cond. Уп-ка Ambalaj Caja Verp.
179.03.00	3/8" RFS	0,99	-	10
179.04.00	1/2" RFS	0,99	-	10

180

Inverse angle valve with thermostatic option for copper or polyethylene pipe

Nickel plated brass body.
Double seal obturator.
Seals in ethylene-propylene elastomer and nitrile elastomer.
Shockproof ABS handwheel.
Threaded angled M standard RBM connection for copper, polyethylene, multi-layer pipe fittings.
Connection to threaded terminal M UNI-EN-ISO 228 with pre-gasket ogive in PTFE.

- Max temperature 110°C
- Max operating pressure 1000 kPa

■ Technical drawing, page 11.11

007

Inverse angle valve with thermostatic option for copper or polyethylene pipe

Vanne thermostatique inversée pour tube cuivre ou polyéthylène

Осевой терморегулирующий клапан для медных и полиэтиленовых труб

Supapă cu opțiune de reglare termostatică inversă pentru conductă din cupru sau polietilenă

Válvula termostatizable inversa, niquelada, conexión adaptador Standard RBM para tubo de cobre, polietileno y multicapa

Mit Thermostat ausrüstbares Umkehrventil für Kupfer- oder Polyethylenrohr

Code Code Артикул Cod Código Code	Size Taille Размер Dimensiune Medida Abmessung	Kvs (m^3/h) Kvs (m^3/h) Kvs ($м^3$/ч) Kvs (m^3/h) Kvs (m^3/h) Kvs (m^3/h)	EURO EURO EURO EURO EURO EURO	Pack Cond. Уп-ка Ambalaj Caja Verp.
180.03.00	3/8" RFS	0,99	-	10
180.04.00	1/2" RFS	0,99	-	10

Use fittings with Standard RBM thread (see page 10.00) for the pipe connections.

395

Angle valve with thermostatic option for iron tube with reversible connections and orthogonal command.

Nickel plated brass body.
Double seal obturator.
Seals in ethylene-propylene elastomer and nitrile elastomer.
Shockproof ABS handwheel.
Straight threaded connections F UNI-EN-ISO 228 for iron pipe, reversible.
Connection to threaded terminal M UNI-EN-ISO 228 with pre-gasket ogive in PTFE.

- Max temperature 110°C
- Max operating pressure 1000 kPa

■ Technical drawing, page 11.11

007

Valve with thermostatic option with reversible connections for iron pipe

Vanne thermostatique à raccords réversibles pour tube métal

Терморегулирующий клапан с обратимыми соединениями для железных труб

Supapă cu posibilitate de reglare termostatică cu prinderi reversibile pentru conductă din fier

Válvula termostatizable 3 vías, niquelada, conexión para tubo de hierro

Mit Thermostat ausrüstbares Ventil mit umkehrbaren Anschlüssen für Eisenrohr

Code Code Артикул Cod Código Code	Size Taille Размер Dimensiune Medida Abmessung	Kvs (m^3/h) Kvs (m^3/h) Kvs ($м^3$/ч) Kvs (m^3/h) Kvs (m^3/h) Kvs (m^3/h)	EURO EURO EURO EURO EURO EURO	Pack Cond. Уп-ка Ambalaj Caja Verp.
395.03.00	3/8" RFS	1,55	-	10
395.04.00	1/2" RFS	1,60	-	10

System side reversible connections with closing cap of unused way.

100% MADE IN ITALY

2078

Thermostatic kit:
- Angle valve for thermostatic control for iron pipe, compliant with standard UNI-EN 215.
- Angle lockshield valve for iron pipe.

Nickel plated brass body.
Double seal obturator.
Seals in ethylene-propylene elastomer and nitrile elastomer.
Shockproof ABS handwheel.
Liquid expansion thermostatic command TL30 with built-in sensor.
Threaded angled connection F UNI-EN-ISO 228 for iron pipe.
Connection to threaded terminal M UNI-EN-ISO 228.

- Max temperature 110°C
- Max operating pressure 1000 kPa

Angle valve for thermostatic control and lockshield valve for iron pipe

Vanne thermostatique et détendeur en angle pour tube métal

Угловой термостатический клапан и настроечной клапан для железных труб

Supapă termostatică și acționator cu cot pentru conductă din fier

Válvula termostatizable y detentor escuadra Jet-Line, y Cabezal termostático conexión adaptador tubo de hierro

Thermostatventil und Rücklaufverschraubung gewinkelt für Eisenrohr

Code Code Артикул Cod Código Code	Size Taille Размер Dimensiune Medida Abmessung	EURO EURO EURO EURO EURO EURO	Pack Cond. Уп-ка Ambalaj Caja Verp.
2078.03.00	3/8″	-	10
2078.04.00	1/2″	-	10

*Licensed use of trademark nr. 43

Supplied with:
- valve with thermostatic option
- liquid expansion thermostatic head
- lockshield valve

045

jet-line

2079

Thermostatic kit:
- Straight valve for thermostatic control for iron pipe, compliant with standard UNI-EN 215.
- Straight lockshield valve for iron pipe.

Nickel plated brass body.
Double seal obturator.
Seals in ethylene-propylene elastomer and nitrile elastomer.
Shockproof ABS handwheel.
Liquid expansion thermostatic command TL30 with built-in sensor.
Threaded straight connection F UNI-EN-ISO 228 for iron pipe.
Connection to threaded terminal M UNI-EN-ISO 228.

- Max temperature 110°C
- Max operating pressure 1000 kPa

Straight valve for thermostatic control and lockshield valve for iron pipe

Vanne thermostatique et détendeur droits pour tube métal

Прямой термостатический клапан и настроечной клапан для железных труб

Supapă termostatică și acționator drepte pentru conductă din fier

Válvula termostatizable y detentor recto Jet-Line, y Cabezal termostático conexión adaptador tubo de hierro

Thermostatventil und Rücklaufverschraubung gerade für Eisenrohr

Code Code Артикул Cod Código Code	Size Taille Размер Dimensiune Medida Abmessung	EURO EURO EURO EURO EURO EURO	Pack Cond. Уп-ка Ambalaj Caja Verp.
2079.03.00	3/8″	-	10
2079.04.00	1/2″	-	10

*Licensed use of trademark nr. 43

Supplied with:
- valve with thermostatic option
- liquid expansion thermostatic head
- lockshield valve

045

jet-line

2080

Kit with thermostatic option:
- Angle valve with thermostatic option for iron pipe, compliant with standard UNI-EN 215.
- Angle lockshield valve for iron pipe.

Nickel plated brass body.
Double seal obturator.
Seals in ethylene-propylene elastomer and nitrile elastomer.
Shockproof ABS handwheel.
Threaded angled connection F UNI-EN-ISO 228 for iron pipe.
Connection to threaded terminal M UNI-EN-ISO 228.

- Max temperature 110°C
- Max operating pressure 1000 kPa

Angle valve with thermostatic option and lockshield valve for iron pipe
Vanne thermostatique et détendeur en angle pour tube métal
Угловой терморегулирующий клапан и настроечный клапан для железных труб
Supapă cu posibilitate de reglare termostatică și acționator cu cot pentru conductă din fier
Válvula termostatizable y detentor escuadra Jet-Line, conexión adaptador tubo de hierro
Ventil mit doppelter Einstellung Winkel für Eisenrohr

Code Code Артикул Cod Código Code	Size Taille Размер Dimensiune Medida Abmessung	EURO EURO EURO EURO EURO EURO	Pack Cond. Уп-ка Ambalaj Caja Verp.
2080.03.00	3/8″	-	10
2080.04.00	1/2″	-	10

*Licensed use of trademark nr. 43

Supplied with:
- valve with thermostatic option
- lockshield valve

2081

Kit with thermostatic option:
- Straight valve with thermostatic option for iron pipe, compliant with standard UNI-EN 215.
- Straight lockshield valve for iron pipe.

Nickel plated brass body.
Double seal obturator.
Seals in ethylene-propylene elastomer and nitrile elastomer.
Shockproof ABS handwheel.
Threaded straight connection F UNI-EN-ISO 228 for iron pipe.
Connection to threaded terminal M UNI-EN-ISO 228.

- Max temperature 110°C
- Max operating pressure 1000 kPa

Straight valve with thermostatic option and lockshield valve for iron pipe
Vanne thermostatique et détendeur droits pour tube métal
Прямой терморегулирующий клапан и настроечный клапан для железных труб
Supapă cu posibilitate de reglare termostatică și acționator drepte pentru conductă din fier
Válvula termostatizable y detentor recto Jet-Line, conexión adaptador tubo de hierro
Thermostatisierbares Ventil und Rücklaufverschraubung gerade für Eisen-rohr

Code Code Артикул Cod Código Code	Size Taille Размер Dimensiune Medida Abmessung	EURO EURO EURO EURO EURO EURO	Pack Cond. Уп-ка Ambalaj Caja Verp.
2081.03.00	3/8″	-	10
2081.04.00	1/2″	-	10

*Licensed use of trademark nr. 43

Supplied with:
- valve with thermostatic option
- lockshield valve

KIT JET-LINE VALVES WITH THERMOSTATIC OPTION WITH COPPER OR POLYETHYLENE CONNECTION

1342

Thermostatic kit:
- Angle valve for thermostatic control for copper or polyethylene pipe, compliant with standard UNI-EN 215.
- Angle lockshield valve for copper or polyethylene pipe.

Nickel plated brass body.
Double seal obturator.
Shockproof ABS handwheel.
Seals in ethylene-propylene elastomer and nitrile elastomer.
Liquid expansion thermostatic command TL30 with built-in sensor.
Threaded angled M standard RBM connection for copper, polyethylene and multilayer pipe fittings.
Connection to threaded terminal M UNI-EN-ISO 228.

- Max temperature 110°C
- Max operating pressure 1000 kPa

Angle valve for thermostatic control and lockshield valve for copper or polyethylene pipe

Vanne thermostatique et détendeur en angle pour tube cuivre ou polyéthylène

Угловой термостатический клапан и настроечный клапан для медных и полиэтиленовых труб

Supapă termostatică și acționator cu cot pentru conductă din cupru sau polietilenă

Válvula termostatizable y detentor escuadra Jet-Line, y Cabezal termostático conexión adaptador Standar RBM para tubo de cobre, polietileno y multicapa

Handventil und Rücklaufverschraubung gewinkelt für Kupfer- oder Polyethylenrohr

Code Code Артикул Cod Código Code	Size Taille Размер Dimensiune Medida Abmessung	EURO EURO EURO EURO EURO EURO	Pack Cond. Уп-ка Ambalaj Caja Verp.
1342.03.00	3/8″	-	10
1342.04.00	1/2″	-	10

*Licensed use of trademark nr. 43
System side standard RBM thread W 24.5x19F

Supplied with:
- valve with thermostatic option
- liquid expansion thermostatic head
- lockshield valve

Use fittings with Standard RBM thread (see page 10.00) for the pipe connections.

1343

Thermostatic kit:
- Straight valve for thermostatic control for copper or polyethylene pipe, compliant with standard UNI-EN 215.
- Straight lockshield valve for copper or polyethylene pipe.

Nickel plated brass body.
Double seal obturator.
Shockproof ABS handwheel.
Seals in ethylene-propylene elastomer and nitrile elastomer.
Liquid expansion thermostatic command TL30 with built-in sensor.
Threaded straight M standard RBM connection for copper, polyethylene and multilayer pipe fittings.
Connection to threaded terminal M UNI-EN-ISO 228.

- Max temperature 110°C
- Max operating pressure 1000 kPa

Straight valve for thermostatic control and lockshield valve for copper or polyethylene pipe

Vanne thermostatique et détendeur droits pour tube cuivre ou polyéthylène

Прямой термостатический клапан и настроечный клапан для медных и полиэтиленовых труб

Supapă termostatică și acționator drepte pentru conductă din cupru sau polietilenă

Válvula termostatizable y detentor recto Jet-Line, y Cabezal termostático conexión adaptador Standar RBM para tubo de cobre, polietileno y multicapa

Thermostatventil und Rücklaufverschraubung gerade für Kupfer- oder Polyethylenrohr

Code Code Артикул Cod Código Code	Size Taille Размер Dimensiune Medida Abmessung	EURO EURO EURO EURO EURO EURO	Pack Cond. Уп-ка Ambalaj Caja Verp.
1343.03.00	3/8″	-	10
1343.04.00	1/2″	-	10

*Licensed use of trademark nr. 43
System side standard RBM thread W 24.5x19F

Supplied with:
- valve with thermostatic option
- liquid expansion thermostatic head
- lockshield valve

Use fittings with Standard RBM thread (see page 10.00) for the pipe connections.

1344

Kit with thermostatic option:
- Angle valve with thermostatic option for copper or polyethylene pipe, compliant with standard UNI-EN 215.
- Angle lockshield valve for copper or polyethylene pipe.

Nickel plated brass body.
Double seal obturator.
Shockproof ABS handwheel.
Seals in ethylene-propylene elastomer and nitrile elastomer.
Threaded angled M standard RBM connection for copper, polyethylene and multilayer pipe fittings.
Threaded connection to terminal M UNI-EN-ISO 228.

- Max temperature 110°C
- Max operating pressure 1000 kPa

Angle valve with thermostatic option and lockshield valve for copper or polyethylene pipe

Vanne thermostatique et détendeur en angle pour tube cuivre ou polyéthylène

Угловой терморегулирующий и настроечный клапан для медных и полиэтиленовых труб

Supapă cu reglare termostatică și acționator cu cotpentru conductă din cupru sau polietilenă

Válvula termostatizable y detentor escuadra Jet-Line, conexión adaptador Standard RBM para tubo de cobre, polietileno y multicapa

Thermostierbares Ventil und Rücklaufverschraubung gewinkelt für Kupfer- oder Polyethylenrohr

Code Code Артикул Cod Código Code	Size Taille Размер Dimensiune Medida Abmessung	EURO EURO EURO EURO EURO EURO	Pack Cond. Уп-ка Ambalaj Caja Verp.
1344.03.00	3/8″	-	10
1344.04.00	1/2″	-	10

*Licensed use of trademark nr. 43
System side standard RBM thread W 24.5x19F

Supplied with:
- valve with thermostatic option
- lockshield valve

Use fittings with Standard RBM thread (see page 10.00) for the pipe connections.

jet-line

1345

Kit with thermostatic option:
- Straight valve with thermostatic option for copper or polyethylene pipe, compliant with standard UNI-EN 215.
- Straight lockshield valve for copper or polyethylene pipe.

Nickel plated brass body.
Double seal obturator.
Shockproof ABS handwheel.
Seals in ethylene-propylene elastomer and nitrile elastomer.
Threaded straight M standard RBM connection for copper, polyethylene and multilayer pipe fittings.
Threaded connection to terminal M UNI-EN-ISO 228.

- Max temperature 110°C
- Max operating pressure 1000 kPa

Straight valve with thermostatic option and lockshield valve for copper or polyethylene pipe

Vanne thermostatique et détendeur droits pour tube cuivre ou polyéthylène

Прямой терморегулирующий и настроечный клапан для медных и полиэтиленовых труб

Supapă cu posibilitate de reglare termostatică și acționator drepte pentru conductă din cupru sau polietilenă

Válvula termostatizable y detentor recto Jet-Line, conexión adaptador Standard RBM para tubo de cobre, polietileno y multicapa

Thermostierbares Ventil und Rücklaufverschraubung gerade für Kupfer- oder Polyethylenrohr

Code Code Артикул Cod Código Code	Size Taille Размер Dimensiune Medida Abmessung	EURO EURO EURO EURO EURO EURO	Pack Cond. Уп-ка Ambalaj Caja Verp.
1345.03.00	3/8″	-	10
1345.04.00	1/2″	-	10

*Licensed use of trademark nr. 43
System side standard RBM thread W 24.5x19F

Supplied with:
- valve with thermostatic option
- lockshield valve

Use fittings with Standard RBM thread (see page 10.00) for the pipe connections.

jet-line

100% MADE IN ITALY

THERMOSTATIC VALVE WITH PRE-SETTING

Possibility of maintenance service while system is in operation.

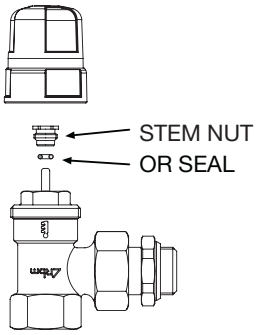

Thanks to a special internal device they allow the pre-setting of the head loss quickly and effectively.

The use in combination with thermostatic heads makes it possible to keep the ambient temperature constant, thus guaranteeing an effective energy saving.

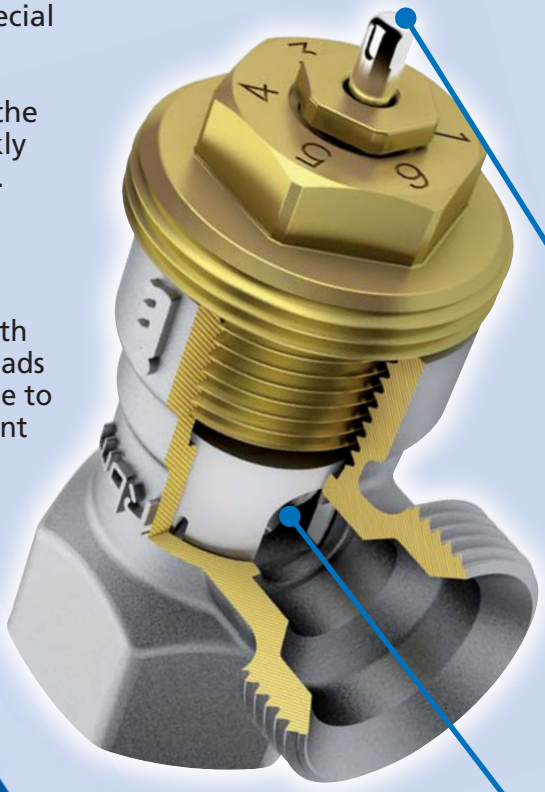

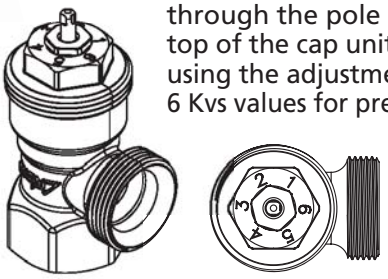

Micrometric setting!
KVS values can be set through the pole on the top of the cap unit, simply using the adjustment tool.
6 Kvs values for pre-setting!

Pole with vulcanized EPDM disc.
EPDM directly vulcanized on the pole disc:

- Avoids noise
- Disc does not stick on the valve seat.

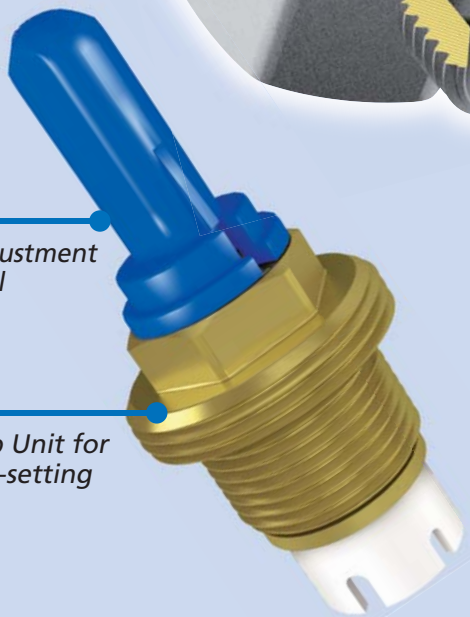

Adjustment tool

Cap Unit for pre-setting

Liquid expansion thermostatic sensor. HIGHER SENSITIVITY!

100% MADE IN ITALY

2640

Angle radiator valve for iron pipe with thermostatic option and pre-setting.

Nickel plated brass body.
Double seal obturator.
Seals in ethylene-propylene elastomer and nitrile elastomer.
Shockproof ABS handwheel.
Threaded angled connection F UNI-EN-ISO 228 for iron pipe.
Connection to threaded terminal M UNI-EN-ISO 228

- Max temperature 110°C
- Max operating pressure 1000 kPa

Angle radiator valve for iron pipe with thermostatic option and pre-setting

Vanne thermostatique avec pré-réglage, angulaire pour tube en fer

Угловой терморегулирующий клапан с предварительным регулированием для железной трубы

Robinet termostatabil cu prereglare, colțar, pentru tuburi de fier

Válvula controlada termostáticamente con pre-regulación, de ángulo, para tubo de hierro

Thermostatventil mit Voreinstellung, abgewinkelt, für Eisenrohr

Code Code Артикул Cod Código Code	Size Taille Размер Dimensiune Medida Abmessung	EURO EURO EURO EURO EURO EURO	Pack Cond. Уп-ка Ambalaj Caja Verp.
2640.03.90	3/8″	-	10
2640.04.90	1/2″	-	10

Licensed use of trademark nr. 43

007

028

Radiator valve with thermostatic option and pre-setting.

2641

Straight radiator valve for iron pipe with thermostatic option and pre-setting.

Nickel plated brass body.
Double seal obturator.
Seals in ethylene-propylene elastomer and nitrile elastomer.
Shockproof ABS handwheel.
Threaded straight connection F UNI-EN-ISO 228 for iron pipe.
Connection to threaded terminal M UNI-EN-ISO 228

- Max temperature 110°C
- Max operating pressure 1000 kPa

Straight radiator valve for iron pipe with thermostatic option and pre-setting

Vanne thermostatique avec pré-réglage, droite pour tube en fer

Прямой терморегулирующий клапан с предварительным регулированием для железной трубы

Robinet termostatabil cu prereglare, drept, pentru tuburi de fier

Válvula controlada termostáticamente con pre-regulación, recta, para tubo de hierro

Thermostatventil mit Voreinstellung, gerade, für Eisenrohr

Code Code Артикул Cod Código Code	Size Taille Размер Dimensiune Medida Abmessung	EURO EURO EURO EURO EURO EURO	Pack Cond. Уп-ка Ambalaj Caja Verp.
2641.03.90	3/8″	-	10
2641.04.90	1/2″	-	10

Licensed use of trademark nr. 43

007

028

Radiator valve with thermostatic option and pre-setting.

2642

Angle radiator valve for copper and polyethylene pipe with thermostatic option and pre-setting.

Nickel plated brass body.
Double seal obturator.
Seals in ethylene-propylene elastomer and nitrile elastomer.
Shockproof ABS handwheel.
Threaded angled M standard RBM connection for copper, polyethylene, multi-layer pipe fittings.
Connection to threaded terminal M UNI-EN-ISO 228

- Max temperature 110°C
- Max operating pressure 1000 kPa

Angle radiator valve for copper and polyethylene pipe with thermostatic option and pre-setting

Vanne thermostatique avec pré-réglage, angulaire pour tube en cuivre ou polyéthylène

Угловой терморегулирующий клапан с предварительным регулированием для трубы из меди или полиэтилена

Robinet termostatabil cu prereglare, colțar, pentru tuburi de cupru sau polietilenă

Válvula controlada termostáticamente con pre-regulación, de ángulo, para tubo de cobre o polietileno

Thermostatventil mit Voreinstellung, abgewinkelt, für Kupfer- oder Polyethylenrohr

Code Code Артикул Cod Código Code	Size Taille Размер Dimensiune Medida Abmessung	EURO EURO EURO EURO EURO EURO	Pack Cond. Уп-ка Ambalaj Caja Verp.
2642.03.90	3/8″	-	10
2642.04.90	1/2″	-	10

Licensed use of trademark nr. 43

007

028

Radiator valve with thermostatic option and pre-setting.

Use fittings with Standard RBM thread (see page 10.00) for the pipe connections.

100% MADE IN ITALY

2643

Straight radiator valve for copper and polyethylene pipe with thermostatic option and pre-setting.

Nickel plated brass body.
Double seal obturator.
Seals in ethylene-propylene elastomer and nitrile elastomer.
Shockproof ABS handwheel.
Threaded straight M standard RBM connection for copper, polyethylene, multi-layer pipe fittings.
Connection to threaded terminal M UNI-EN-ISO 228

- Max temperature 110°C
- Max operating pressure 1000 kPa

Straight radiator valve for copper and polyethylene pipe with thermostatic option and pre-setting

Vanne thermostatique avec pré-réglage, droite pour tube en cuivre ou polyéthylène

Прямой терморегулирующий клапан с предварительным регулированием для трубы из меди или полиэтилена

Robinet termostatabil cu prereglare, drept, pentru tuburi de cupru sau polietilenă

Válvula controlada termostáticamente con pre-regulación, recta, para tubo de cobre o polietileno

Thermostatventil mit Voreinstellung, gerade, für Kupfer- oder Polyethylenrohr

Code Code Артикул Cod Código Code	Size Taille Размер Dimensiune Medida Abmessung	EURO EURO EURO EURO EURO EURO	Pack Cond. Уп-ка Ambalaj Caja Verp.
2643.03.90	3/8"	-	10
2643.04.90	1/2"	-	10

Licensed use of trademark nr. 43

Radiator valve for copper and polyethylene pipe with thermostatic option and pre-setting.

Use fittings with Standard RBM thread (see page 10.00) for the pipe connections.

007

2720

Radiator reversible valve for iron pipe with thermostatic option and pre-setting.

Nickel plated brass body.
Double seal obturator.
Seals in ethylene-propylene elastomer and nitrile elastomer.
Shockproof ABS handwheel.
Straight threaded connections F UNI-EN-ISO 228 for iron pipe, reversible.
Connection to threaded terminal M UNI-EN-ISO 228.

- Max temperature 110°C
- Max operating pressure 1000 kPa

Radiator reversible valve for iron pipe with thermostatic option and pre-setting

Vanne thermostatique avec pré-réglage, avec raccords réversibles pour tube en fer

Терморегулирующий клапан с предварительным регулированием с реверсивными креплениями для железной трубы

Robinet termostatabil cu prereglare, cu racorduri reversibile, pentru tuburi de fier

Válvula controlada termostáticamente con pre-regulación y racores reversibles, para tubo de hierro

Thermostatventil mit Voreinstellung, mit umkehrbaren Anschlüssen für Eisenrohr

Code Code Артикул Cod Código Code	Size Taille Размер Dimensiune Medida Abmessung	EURO EURO EURO EURO EURO EURO	Pack Cond. Уп-ка Ambalaj Caja Verp.
2720.03.90	3/8"	-	10
2720.04.90	1/2"	-	10

Radiator valve with thermostatic option and pre-setting.

System side reversible connections with closing cap of unused way.

007

2878

Cap adjusting wrench.

It allows to regulate the kvs by simply acting on the external part of the control device of the thermostatic unit.

Cap adjusting wrench

Clé pour réglage couvercle

Ключ для регулирования колпака

Cheie pentru reglarea capișonului

Llave de regulación de sombrerete

Schlüssel zur Haubenregulierung

Code Code Артикул Cod Código Code	EURO EURO EURO EURO EURO EURO	Pack Cond. Уп-ка Ambalaj Caja Verp.
2878.00.00	-	10

007

New

100% MADE IN ITALY

590

Thermostatic command for valves with thermostatic option.
Sensitive internal element with liquid expansion.

Prearranged for temperature limitation and anti-tampering blockage.

- Max storage temperature 50 °C
- Anti-freeze triggering (*) 7 °C
- Setting field (1÷5) 10...30 °C
- Hysteresis 0.4 °C
- Max differential pressure (head mounted on valve) 100 kPa
- Thermostatic ethyl-acetate bulb liquid
- Distance sensor cable length 2m (series TL 20)

■ Technical drawing, page 11.12

Thermostatic head with liquid expansion sensor
Tête thermostatique avec capteur à dilatation de liquide
Термостатическая головка с жидкостным сенсором
Cap termostatic cu senzor cu dilatare de lichid
Cabezal termostático blanco con sensor a líquido
Thermostatkopf mit Sensor Flüssigkeitsausdehnung

Code Code Артикул Cod Código Code	Model Modèle Модель Model Modelo Modell	EURO EURO EURO EURO EURO EURO	Pack Cond. Уп-ка Ambalaj Caja Verp.
590.00.00*	TL 10	-	10
720.00.30*	TL 30	-	10
2633.00.00*	TL 70	-	10

*Licensed use of trademark nr. 43

Thermostatic head with distance sensor
Tête thermostatique avec capteur à distance
Термостатическая головка с дистанционным датчиком
Cap termostatic cu senzor la distanță
Cabeza termostática con sensor a distancia
Thermostatkopf mit Fernfühler

Code Code Артикул Cod Código Code	Model Modèle Модель Model Modelo Modell	EURO EURO EURO EURO EURO EURO	Pack Cond. Уп-ка Ambalaj Caja Verp.
590.00.10*	TL 20	-	1

*Licensed use of trademark nr. 43

Liquid expansion sensor.

High energy efficiency.
Approved in Class A.

008

2501

Programmable thermostatic command with weekly program, for valves with thermostatic option.

- Power supply: 2 1,5V AA type batteries
- Autonomy: 5 years
- Functioning: - Automatic with two temperature levels (comfort and economy) or manual by means of the select dial.
- Daily switchings: 4 in comfort mode and 4 in economy mode
- Functioning temperature: 0 ÷ 50°C
- Anti-freeze protection temperature: 6°C
- IP30 degree of protection
- Size (lxhxp): 52x83x65 mm

Chrome plated-thermostatic head with weekly program
Tête chrono-thermostatique à programme hebdomadaire
Хронотермостатическая головка с недельной программой
Cap crono-termostatic cu program săptămânal
Cabezal crono-termostático para válvulas termostatizables con programación semanal
Zeitthermostatkopf mit Wochenprogramm

Code Code Артикул Cod Código Code	Power supply Alimentation Питание Alimentare Alimentación Versorgung	EURO EURO EURO EURO EURO EURO	Pack Cond. Уп-ка Ambalaj Caja Verp.
2501.00.22	1,5 V	-	1

Programming device
Clé de programmation
Ключ для программирования
Cheie de programare
Llave de programación
Programmierschlüssel

Code Code Артикул Cod Código Code	EURO EURO EURO EURO EURO EURO	Pack Cond. Уп-ка Ambalaj Caja Verp.
2962.00.02	-	1

It allows to easily program the daily COMFORT and ECONOMY time bands of the chronothermostat thanks to the graphical interface on the PC. The temperatures can be saved directly on the device and uploaded on the chronothermostat.

New

100% MADE IN ITALY

2835

Thermostatic control for thermostatic valves. Remote control makes programming procedures easier during installation.

- Anti freezing protection: 0 °C
- Calibration field: (1÷5) 0÷27 °C
- Hysteresis: 0.4 K
- Remote control cable length: 2m
- Sensor maximum temperature: 50 °C

Thermostatic head with remote control
Tête thermostatique avec commande à distance
Термостатическая головка с дистанционным управлением
Cap termostatic cu comandă de la distanță
Cabeza termostática con mando a distancia
Thermostatkopf mit Fernsteuerung

Code Code Артикул Cod Código Code	Model Modèle Модель Model Modelo Modell	EURO EURO EURO EURO EURO EURO	Pack Cond. Уп-ка Ambalaj Caja Verp.
2835.00.02	-	-	1

New

Liquid expansion sensor.

Remote command It makes installation procedures easier.

008

306

Thermo-electrically controlled actuator for valves with thermostatic option, complete with valve body clamping ring nut and electric power cable.

Normally closed valve position when power missing.

- Power supply 24/230 V
- Consumption 2 W
- Frequency 50/60 Hz
- Electric protection IP44
- Operating temperature 5...50 °C
- Switch context capacity (0.5A) 1 A (where present)
- 4 mm stroke

■ Technical drawing, page 11.12

Thermo-electrically controlled actuator
Servomoteur à commande électrothermique
Электротермический сервопривод
Servomotor cu comandă electrotermică
Cabezal electrotérmico normalmente cerrado para válvulas termostatizables
Servomotor mit elektrothermischer Steuerung

Code Code Артикул Cod Código Code	Power supply Alimentation Питание Alimentare Alimentación Versorgung	EURO EURO EURO EURO EURO EURO	Pack Cond. Уп-ка Ambalaj Caja Verp.
306.00.02	230V AC	-	1
306.00.12	24V AC	-	1

Version without auxiliary microswitch (2 wires)

Thermo-electrically controlled actuator, with auxiliary microswitch
Servomoteur à commande électrothermique, avec microrupteur auxiliaire
Электротермический сервопривод с вспомогательным микропереключателем.
Servomotor cu comandă electrotermică, cu microîntrerupător auxiliar
Cabezal electrotérmico normalmente cerrado con microinterruptor, para válvula termostatizable y válvula de zona compacta
Servomotor mit elektrothermischer Steuerung, mit Hilfmikroschalter

Code Code Артикул Cod Código Code	Power supply Alimentation Питание Alimentare Alimentación Versorgung	EURO EURO EURO EURO EURO EURO	Pack Cond. Уп-ка Ambalaj Caja Verp.
306.00.42	230V AC	-	1
306.00.52	24V AC	-	1

Version supplied with auxiliary microswitch (4 wires)

CE

100% MADE IN ITALY

209

Pair of temperature limitation inserts for thermostatic head.
For example to block the knob at position 3 (T=20°C), insert the specific inserts in the two slots close to number 20 on the fixed knob.
To limit the adjustment to a wider value, move the inserts to the desired positions.

Pair of temperature limitation inserts for thermostatic head
Lot de eux inserts pour limitation de température pour tête thermostatique
Пара вставок для ограничения температуры в термостатических головках
Pereche de plăcuțe pentru limitarea temperaturii pentru cap termostatic
Par de limitadores para limitación de la abertura y bloqueo en cabezales termostáticos
Eisatzpaar für Temperaturbeschränkung für Thermostatkopf

Code Code Артикул Cod Código Code	EURO EURO EURO EURO EURO EURO	Pack Cond. Уп-ка Ambalaj Caja Verp.
209.00.00	-	1

008

2274

Figure 1:
Vandal proof and anti-tampering knob for thermostatic head RBM.

Figure 2:
Specific tool for mounting vandal proof knob.

Vandal proof and anti-tampering knob for thermostatic head RBM
Poignée anti-vandalisme et anti-altération pour tête thermostatique RBM
Антивандальная и блокирующая насадка для термостатической головки RBM
Buton antivandalizare și antideteriorare pentru cap termostatic RBM
Sistema antirrobo y antimanipulación para cabezal termostático RBM
Zerstörungs- und abänderungssicheres Handrad für Thermostatkopf RBM

Code Code Артикул Cod Código Code	Figure Figure Рисунок Figura Figura Abbildung	EURO EURO EURO EURO EURO EURO	Pack Cond. Уп-ка Ambalaj Caja Verp.
2274.005*	1 + 2	-	6
2273.005	2	-	1

*Package includes one tool code 2273.005

008

316

The RBM thermostatic head can be equipped with a vandal proof clamp allowing it to be removed by just using the specific tool (code 2151.005).

Vandal proof clamp for thermostatic head RBM
Collier anti-vandalisme pour tête thermostatique RBM
Антивандальная скоба для термостатической головки RBM
Colier antivandalizare și antideteriorare pentru cap termostatic RBM
Abrazadera antirrobo para cabezal termostático RBM
Zerstörungssichere Schelle für Thermostatkopf RBM

Code Code Артикул Cod Código Code	Figure Figure Рисунок Figura Figura Abbildung	EURO EURO EURO EURO EURO EURO	Pack Cond. Уп-ка Ambalaj Caja Verp.
316.00.10	1	-	1
2151.005	2	-	2
316.00.00	1+2	-	1

008

009

7

Manual single adjustment angle valve for iron pipe.

Nickel plated brass body.
Seals in ethylene-propylene elastomer and nitrile elastomer.
Shockproof ABS handwheel.
Threaded angled connection F UNI-EN-ISO 228 for iron pipe.
Connection to threaded terminal M UNI-EN-ISO 228 with pre-gasket ogive in PTFE (only for diameters 3/8" and 1/2").

- Max temperature 110°C
- Max operating pressure 1000 kPa

■ Technical drawing, page 11.12

Single regulating angle valve for iron pipe
Vanne à simple réglage en angle pour tube métal
Угловой клапан простой регулировки для железных труб
Supapă cu reglare simplă cu coţ pentru conductă din fier
Válvula manual escuadra de simple regulación, niquelada, conexión para tubo de hierro
Ventil mit einfacher Einstellung Winkel für Eisenrohr

Code Code Артикул Cod Código Code	Size Taille Размер Dimensiune Medida Abmessung	Kvs (m^3/h) Kvs (m^3/h) Kvs ($м^3$/ч) Kvs (m^3/h) Kvs (m^3/h) Kvs (m^3/h)	EURO EURO EURO EURO EURO EURO	Pack Cond. Уп-ка Ambalaj Caja Verp.
7.03.00	3/8" RFS	3,2	-	10
7.04.00	1/2" RFS	4,0	-	10
7.05.00	3/4"	10,8	-	10
7.06.00	1"	17,1	-	6
7.07.00	1"1/4	22,5	-	4

009

8

Manual single adjustment straight valve for iron pipe.

Nickel plated brass body.
Seals in ethylene-propylene elastomer and nitrile elastomer.
Shockproof ABS handwheel.
Threaded straight connection F UNI-EN-ISO 228 for iron pipe.
Connection to threaded terminal M UNI-EN-ISO 228 with pre-gasket ogive in PTFE (only for diameters 3/8" and 1/2").

- Max temperature 110°C
- Max operating pressure 1000 kPa

■ Technical drawing, page 11.12

Single regulating straight valve for iron pipe
Vanne à simple réglage droite pour tube métal
Прямой клапан простой регулировки для железных труб
Supapă cu reglare simplă dreaptă pentru conductă din fier
Válvula manual recta de simple regulación, niquelada, conexión para tubo de hierro
Ventil mit einfacher Einstellung gerade für Eisenrohr

Code Code Артикул Cod Código Code	Size Taille Размер Dimensiune Medida Abmessung	Kvs (m^3/h) Kvs (m^3/h) Kvs ($м^3$/ч) Kvs (m^3/h) Kvs (m^3/h) Kvs (m^3/h)	EURO EURO EURO EURO EURO EURO	Pack Cond. Уп-ка Ambalaj Caja Verp.
8.03.00	3/8" RFS	1,4	-	10
8.04.00	1/2" RFS	1,8	-	10
8.05.00	3/4"	4,9	-	10
8.06.00	1"	8,2	-	6
8.07.00	1"1/4	22,5	-	4

009

27

Manual single adjustment angle valve for copper or polyethylene pipe.

Nickel plated brass body.
Seals in ethylene-propylene elastomer and nitrile elastomer.
Shockproof ABS handwheel.
Threaded angled M standard RBM connection for copper, polyethylene, multi-layer pipe fittings.
Connection to threaded terminal M UNI-EN-ISO 228 with pre-gasket ogive in PTFE.

- Max temperature 110°C
- Max operating pressure 1000 kPa

■ Technical drawing, page 11.12

Single regulating angle valve for copper or polyethylene pipe.
Vanne à simple réglage en angle pour tube cuivre ou polyéthylène
Угловой клапан простой регулировки для медных или полиэтиленовых труб
Supapă cu reglare simplă cu cot pentru conductă din cupru sau polietilenă
Válvula manual escuadra de simple regulación, niquelada, conexión adaptador Standard RBM para tubo de cobre, polietileno y multicapa
Ventil mit einfacher Einstellung Winkel für Kupfer- oder Polyethylenrohr

Code Code Артикул Cod Código Code	Size Taille Размер Dimensiune Medida Abmessung	Kvs (m^3/h) Kvs (m^3/h) Kvs ($м^3$/ч) Kvs (m^3/h) Kvs (m^3/h) Kvs (m^3/h)	EURO EURO EURO EURO EURO EURO	Pack Cond. Уп-ка Ambalaj Caja Verp.
27.03.00	3/8"	3,2	-	10
27.03.10	3/8" Ø 18 (*)	3,2	-	10
27.04.00	1/2"	4,0	-	10
27.04.10	1/2" Ø 18 (*)	4,0	-	10

(*): Can only be fed by oØ 18 mm copper pipes

Use fittings with Standard RBM thread (see page 10.00) for the pipe connections.

009

009

28

Manual single adjustment straight valve for copper or polyethylene pipe.

Nickel plated brass body.
Seals in ethylene-propylene elastomer and nitrile elastomer.
Shockproof ABS handwheel.
Threaded straight M standard RBM connection for copper, polyethylene, multi-layer pipe fittings.
Connection to threaded terminal M UNI-EN-ISO 228 with pre-gasket ogive in PTFE.

- Max temperature 110°C
- Max operating pressure 1000 kPa

■ Technical drawing, page 11.12

Single straight regulating valve for copper or polyethylene pipe
Vanne à simple réglage droite pour tube cuivre ou polyéthylène
Прямой клапан простой регулировки для медных или полиэтиленовых труб
Supapă cu reglare simplă dreaptă pentru conductă din cupru sau polietilenă
Válvula manual recta de simple regulación, niquelada, conexión adaptador Standard RBM para tubo de cobre, polietileno y multicapa
Ventil mit einfacher Einstellung gerade für Kupfer- oder Polyethylenrohr

Code Code Артикул Cod Código Code	Size Taille Размер Dimensiune Medida Abmessung	Kvs (m^3/h) Kvs (m^3/h) Kvs ($м^3$/ч) Kvs (m^3/h) Kvs (m^3/h) Kvs (m^3/h)	EURO EURO EURO EURO EURO EURO	Pack Cond. Уп-ка Ambalaj Caja Verp.
28.03.00	3/8"	1,4	-	10
28.03.10	3/8" Ø 18 (*)	1,4	-	10
28.04.00	1/2"	1,8	-	10
28.04.10	1/2" Ø 18 (*)	1,8	-	10

(*): Can only be fed by oØ 18 mm copper pipes

Use fittings with Standard RBM thread (see page 10.00) for the pipe connections.

009

100% MADE IN ITALY

009

9

Angle lockshield shut-off and regulating valve for iron pipe

Nickel plated brass body.
Seals in ethylene-propylene elastomer and nitrile elastomer.
Shockproof ABS cap.
Threaded angled connection F UNI-EN-ISO 228 for iron pipe.
Connection to threaded terminal M UNI-EN-ISO 228 with pre-gasket ogive in PTFE (only for diameters 3/8" and 1/2").

- Max temperature 110°C
- Max operating pressure 1000 kPa

■ Technical drawing, page 11.12

Angle lockshield regulating valve for iron pipe
Détendeur de régulation en angle pour tube métal
Угловой настроечный клапан для железных труб
Acționator de reglare cu cot pentru conductă din fier
Detentor escuadra, niquelado, conexión para tubo de hierro
Rücklaufverschraubung zur Einstellung Winkel für Eisenrohr

Code Code Артикул Cod Código Code	Size Taille Размер Dimensiune Medida Abmessung	Kvs (m^3/h) Kvs (m^3/h) Kvs ($м^3$/ч) Kvs (m^3/h) Kvs (m^3/h) Kvs (m^3/h)	EURO EURO EURO EURO EURO EURO	Pack Cond. Уп-ка Ambalaj Caja Verp.
9.03.00	3/8" RFS	3,2	-	10
9.04.00	1/2" RFS	4,0	-	10
9.05.00	3/4"	10,8	-	10
9.06.00	1"	17,1	-	6
9.07.00	1"1/4	22,5	-	4

009

10

Straight lockshield shut-off and regulating valve for iron pipe.

Nickel plated brass body.
Seals in ethylene-propylene elastomer and nitrile elastomer.
Shockproof ABS cap.
Threaded straight connection F UNI-EN-ISO 228 for iron pipe.
Connection to threaded terminal M UNI-EN-ISO 228 with pre-gasket ogive in PTFE (only for diameters 3/8" and 1/2").

- Max temperature 110°C
- Max operating pressure 1000 kPa

■ Technical drawing, page 11.13

Straight lockshield regulating valve for iron pipe
Détendeur de régulation droit pour tube métal
Прямой настроечный клапан для железных труб
Acționator de reglare drept pentru conductă din fier
Detentor recto, niquelado, conexión para tubo de hierro
Rücklaufverschraubung zur Einstellung gerade für Eisenrohr

Code Code Артикул Cod Código Code	Size Taille Размер Dimensiune Medida Abmessung	Kvs (m^3/h) Kvs (m^3/h) Kvs ($м^3$/ч) Kvs (m^3/h) Kvs (m^3/h) Kvs (m^3/h)	EURO EURO EURO EURO EURO EURO	Pack Cond. Уп-ка Ambalaj Caja Verp.
10.03.00	3/8" RFS	1,4	-	10
10.04.00	1/2" RFS	1,8	-	10
10.05.00	3/4"	4,9	-	10
10.06.00	1"	8,2	-	6
10.07.00	1"1/4	22,5	-	4

009

29

Angle lockshield shut-off and regulating valve for copper or polyethylene pipe.

Nickel plated brass body.
Seals in ethylene-propylene elastomer and nitrile elastomer.
Shockproof ABS cap.
Threaded angled M standard RBM connection for copper, polyethylene, multi-layer pipe fittings.
Connection to threaded terminal M UNI-EN-ISO 228 with pre-gasket ogive in PTFE.

- Max temperature 110°C
- Max operating pressure 1000 kPa

■ Technical drawing, page 11.13

Angle lockshield regulating valve for copper or polyethylene pipe
Détendeur de régulation en angle pour tube cuivre ou polyéthylène
Угловой настроечный клапан для медных и полиэтиленовых труб
Acționator de reglare cu cot pentru conductă din cupru sau polietilenă
Detentor escuadra, niquelado, conexión adaptador Standard RBM para tubo de cobre, polietileno y multicapa
Rücklaufverschraubung zur Einstellung Winkel für Kupfer- oder Polyethylenrohr

Code Code Артикул Cod Código Code	Size Taille Размер Dimensiune Medida Abmessung	Kvs (m^3/h) Kvs (m^3/h) Kvs ($м^3$/ч) Kvs (m^3/h) Kvs (m^3/h) Kvs (m^3/h)	EURO EURO EURO EURO EURO EURO	Pack Cond. Уп-ка Ambalaj Caja Verp.
29.03.00	3/8"	3,2	-	10
29.03.10	3/8" Ø 18 (*)	3,2	-	10
29.04.00	1/2"	4,0	-	10
29.04.10	1/2" Ø 18 (*)	4,0	-	10

(*): Can only be fed by oØ 18 mm copper pipes

Use fittings with Standard RBM thread (see page 10.00) for the pipe connections.

009

30

Straight lockshield shut-off and regulating valve for copper or polyethylene pipe.

Nickel plated brass body.
Seals in ethylene-propylene elastomer and nitrile elastomer.
Shockproof ABS cap.
Threaded straight M standard RBM connection for copper, polyethylene, multilayer pipe fittings.
Connection to threaded terminal M UNI-EN-ISO 228 with pre-gasket ogive in PTFE.

- Max temperature 110°C
- Max operating pressure 1000 kPa

■ Technical drawing, page 11.13

Straight lockshield regulating valve for copper or polyethylene pipe
Détendeur de régulation droit pour tube cuivre ou polyéthylène
Прямой настроечный клапан для медных и полиэтиленовых труб
Acționator de reglare drept pentru conductă din cupru sau polietilenă
Detentor recto, niquelado, conexión adaptador Standard RBM para tubo de cobre, polietileno y multicapa
Rücklaufverschraubung zur Einstellung gerade für Kupfer- oder Polyethylenrohr

Code Code Артикул Cod Código Code	Size Taille Размер Dimensiune Medida Abmessung	Kvs (m^3/h) Kvs (m^3/h) Kvs ($м^3$/ч) Kvs (m^3/h) Kvs (m^3/h) Kvs (m^3/h)	EURO EURO EURO EURO EURO EURO	Pack Cond. Уп-ка Ambalaj Caja Verp.
30.03.00	3/8"	1,4	-	10
30.03.10	3/8" Ø 18 (*)	1,4	-	10
30.04.00	1/2"	1,8	-	10
30.04.10	1/2" Ø 18 (*)	1,8	-	10

(*): Can only be fed by oØ 18 mm copper pipes

Use fittings with Standard RBM thread (see page 10.00) for the pipe connections.

009

100% MADE IN ITALY

151

Angle valve with double seal o-ring for iron pipe "jet-line" series.

Nickel plated brass body.
Seals in ethylene-propylene elastomer (EPDM) and nitrile elastomer (NBR).
Shockproof ABS handwheel.
Threaded angled connection F UNI-EN-ISO 228 for iron pipe fittings.
Connection to threaded terminal M UNI-EN-ISO 228 (with pre-gasket ogive in PTFE series *).

- Max temperature 110°C
- Max operating pressure 1000 kPa

Double seal O.R. angle valve for iron pipe - RFS seal on radiator*

*Vanne en angle à double joint torique pour tube métal - Garniture RFS sur le radiateur**

*Угловой клапан с двойным уплотнительным кольцом OR для железных труб - Система быстрого монтажа RFS**

*Supapă cu cot cu dublă etanșare o.r. pentru conductă din fier – Garnitură RFS pe radiator**

*Válvula manual escuadra Jet-Line, conexión para tubo de hierro y autojunta RFS**

*Eckventil mit doppelter OR-Dichtung für Eisenrohr - Dichtung RFS auf Heizkörper**

Code Code Артикул Cod Código Code	Size Taille Размер Dimensiune Medida Abmessung	EURO EURO EURO EURO EURO EURO	Pack Cond. Уп-ка Ambalaj Caja Verp.
151.03.00	3/8" RFS	-	10
151.04.00	1/2" RFS	-	10

Angle valve with double seal o-ring for iron pipe

Vanne en angle à double joint torique pour tube métal

Угловой клапан с двойным уплотнительным кольцом для железных труб

Supapă cu cot cu dublă etanșare o.r. pentru conductă din fier

Válvula manual escuadra Jet-Line, conexión para tubo de hierro

Ventil mit doppelter OR-Dichtung für Eisenrohr

Code Code Артикул Cod Código Code	Size Taille Размер Dimensiune Medida Abmessung	EURO EURO EURO EURO EURO EURO	Pack Cond. Уп-ка Ambalaj Caja Verp.
151.03.40	3/8"	-	10
151.04.40	1/2"	-	10

Thread MF UNI-EN-ISO 228

152

Straight valve with double seal o-ring for iron pipe "jet-line" series.

Nickel plated brass body.
Seals in ethylene-propylene elastomer (EPDM) and nitrile elastomer (NBR).
Shockproof ABS handwheel.
Threaded straight connection F UNI-EN-ISO 228 for iron pipe fittings.
Connection to threaded terminal M UNI-EN-ISO 228 (with pre-gasket ogive in PTFE series *).

- Max temperature 110°C
- Max operating pressure 1000 kPa

Double seal O.R. straight valve for iron pipe - RFS seal on radiator*

*Vanne droite à double joint torique pour tube métal - Garniture RFS sur le radiateur**

*Прямой настроечный клапан с двойным уплотнительным кольцом OR для железных труб - Система быстрого монтажа RFS**

*Supapă dreaptă cu dublă etanșare o.r. pentru conductă din fier – Garnitură RFS pe radiator**

*Válvula manual recta Jet-Line, conexión para tubo de hierro y autojunta RFS**

*Gerades Ventil mit doppelter OR-Dichtung für Eisenrohr - Dichtung RFS auf Heizkörper**

Code Code Артикул Cod Código Code	Size Taille Размер Dimensiune Medida Abmessung	EURO EURO EURO EURO EURO EURO	Pack Cond. Уп-ка Ambalaj Caja Verp.
152.03.00	3/8" RFS	-	10
152.04.00	1/2" RFS	-	10

Straight valve with double seal o-ring for iron pipe

Vanne droite à double joint torique pour tube métal

Прямой клапан с двойным уплотнительным кольцом для железных труб

Supapă dreaptă cu dublă etanșare o.r. pentru conductă din fier

Válvula manual recta Jet-Line, conexión para tubo de hierro

Ventil mit OR-Dichtung gerade für Eisenrohr

Code Code Артикул Cod Código Code	Size Taille Размер Dimensiune Medida Abmessung	EURO EURO EURO EURO EURO EURO	Pack Cond. Уп-ка Ambalaj Caja Verp.
152.03.40	3/8"	-	10
152.04.40	1/2"	-	10

Thread MF UNI-EN-ISO 228

100% MADE IN ITALY

153

Angle lockshield regulating valve for iron pipe "jet-line" series.

Nickel plated brass body.
Seals in ethylene-propylene elastomer (EPDM) and nitrile elastomer (NBR).
Shockproof ABS handwheel.
Threaded angled connection F UNI-EN-ISO 228 for iron pipe fittings.
Connection to threaded terminal M UNI-EN-ISO 228 (with pre-gasket ogive in PTFE series *).

- Max temperature 110°C
- Max operating pressure 1000 kPa

Angle lockshield regulating valve for iron pipe - RFS seal on radiator*
*Détendeur de régulation en angle pour tube métal - Garniture RFS sur le radiateur**
*Угловой настроечный клапан для железных труб - Система быстрого монтажа RFS**
*Acționator de reglare cu cot pentru conductă din fier – Garnitură RFS pe radiator**
*Detentor escuadra Jet-Line, conexión para tubo de hierro y autojunta RFS**
*Rücklaufverschraubung zur Einstellung gewinkelt für Eisenrohr - Dichtung RFS auf Heizkörper**

Code Code Артикул Cod Código Code	Size Taille Размер Dimensiune Medida Abmessung	EURO EURO EURO EURO EURO EURO	Pack Cond. Уп-ка Ambalaj Caja Verp.
153.03.00	3/8" RFS	-	10
153.04.00	1/2" RFS	-	10

Angle lockshield regulating valve for iron pipe
Détendeur de régulation en angle pour tube métal
Угловой настроечный клапан для железных труб
Acționator de reglare cu cot pentru conductă din fier
Detentor escuadra Jet-Line, conexión para tubo de hierro
Rücklaufverschraubung zur Einstellung Winkel für Eisenrohr

Code Code Артикул Cod Código Code	Size Taille Размер Dimensiune Medida Abmessung	EURO EURO EURO EURO EURO EURO	Pack Cond. Уп-ка Ambalaj Caja Verp.
153.03.40	3/8"	-	10
153.04.40	1/2"	-	10

Thread MF UNI-EN-ISO 228

154

Straight lockshield regulating valve for iron pipe "jet-line" series.

Nickel plated brass body.
Seals in ethylene-propylene elastomer (EPDM) and nitrile elastomer (NBR).
Shockproof ABS handwheel.
Threaded straight connection F UNI-EN-ISO 228 for iron pipe fittings.
Connection to threaded terminal M UNI-EN-ISO 228 (with pre-gasket ogive in PTFE series *).

- Max temperature 110°C
- Max operating pressure 1000 kPa

Straight lockshield regulating valve for iron pipe - RFS seal on radiator*
*Détendeur de régulation droit pour tube métal - Garniture RFS sur le radiateur**
*Прямой настроечный клапан с двойным уплотнительным кольцом OR для железных труб - Система быстрого монтажа RFS**
*Acționator de reglare drept pentru conductă din fier – Garnitură RFS pe radiator**
*Detentor recto Jet-Line, conexión para tubo de hierro y autojunta RFS**
*Rücklaufverschraubung zur Einstellung gerade für Eisenrohr - Dichtung RFS auf Heizkörper**

Code Code Артикул Cod Código Code	Size Taille Размер Dimensiune Medida Abmessung	EURO EURO EURO EURO EURO EURO	Pack Cond. Уп-ка Ambalaj Caja Verp.
154.03.00	3/8" RFS	-	10
154.04.00	1/2" RFS	-	10

Straight lockshield regulating valve for iron pipe
Détendeur de régulation droit pour tube métal
Прямой настроечный клапан для железных труб
Acționator de reglare drept pentru conductă din fier
Detentor recto Jet-Line, conexión para tubo de hierro
Rücklaufverschraubung zur Einstellung gerade für Eisenrohr

Code Code Артикул Cod Código Code	Size Taille Размер Dimensiune Medida Abmessung	EURO EURO EURO EURO EURO EURO	Pack Cond. Уп-ка Ambalaj Caja Verp.
154.03.40	3/8"	-	10
154.04.40	1/2"	-	10

Thread MF UNI-EN-ISO 228

100% MADE IN ITALY

587

Angle valve with double O.R. seal for copper or polyethylene pipe, standard RBM connection, "jet-line" series.

Nickel plated brass body.
Seals in ethylene-propylene elastomer (EPDM) and nitrile elastomer (NBR).
Shockproof ABS handwheel.
Threaded angled standard RBM connection for copper, polyethylene, multi-layer pipe fittings.
Connection to threaded terminal M UNI-EN-ISO 228 (with pre-gasket ogive in PTFE series *).

- Max temperature 110°C
- Max operating pressure 1000 kPa

Angle valve with double O.R. seal for copper or polyethylene pipe. RFS seal on radiator*

*Vanne en angle à double joint torique pour tube cuivre ou polyéthylène - Garniture RFS sur le radiateur**

*Угловой клапан с двойным уплотнительным кольцом ORдля медных и полиэтиленовых труб - Система быстрого монтажа RFS**

*Supapă cu cot cu dublă etanșare o.r. pentru conductă din cupru sau polietilenă – Garnitură RFS pe radiator**

*Válvula manual escuadra Jet-Line, conexión adaptador Standar RBM para tubo de cobre, polietileno y multicapa y autojunta RFS**

*Eckventil mit doppelter OR-Dichtung für Kupfer- oder Polyethylenrohr - Dichtung RFS auf Heizkörper**

Code Code Артикул Cod Código Code	Size Taille Размер Dimensiune Medida Abmessung	EURO EURO EURO EURO EURO EURO	Pack Cond. Уп-ка Ambalaj Caja Verp.
587.03.00	3/8" RFS	-	10
587.04.00	1/2" RFS	-	10

Angle valve with double O.R. seal for copper or polyethylene pipe

Vanne en angle à double joint torique pour tube cuivre ou polyéthylène

Угловой клапан с двойным уплотнительным кольцом для медных и плиэтиленовых труб

Supapă cu cot cu dublă etanșare o.r. pentru conductă din cupru sau polietilenă

Válvula manual escuadra Jet-Line, conexión adaptador Standard RBM para tubo de cobre, polietileno y multicapa

Eckventil mit doppelter OR-Dichtung für Kupfer- oder Polyethylenrohr

Code Code Артикул Cod Código Code	Size Taille Размер Dimensiune Medida Abmessung	EURO EURO EURO EURO EURO EURO	Pack Cond. Уп-ка Ambalaj Caja Verp.
587.03.40	3/8"	-	10
587.04.40	1/2"	-	10

System side standard RBM thread W 24.5x19F

jet-line

Use fittings with Standard RBM thread (see page 10.00) for the pipe connections.

588

Straight valve with double O.R. seal for copper or polyethylene pipe, standard RBM connection, "jet-line" series.

Nickel plated brass body
Seals in ethylene-propylene elastomer (EPDM) and nitrile elastomer(NBR).
Shockproof ABS handwheel.
Threaded straight standard RBM connection, for copper, polyethylene, multi-layer pipe fittings.
Connection to threaded terminal M UNI-EN-ISO 228 (with pre-gasket ogive in PTFE series *).

- Max temperature 110°C
- Max operating pressure 1000 kPa

Straight valve with double O.R. seal for copper or polyethylene pipe - RFS seal on radiator*

*Vanne droite à double joint torique pour tube cuivre ou polyéthylène - Garniture RFS sur le radiateur**

*Прямой клапан с двойным уплотнительным кольцом OR для медных и полиэтиленовых труб - Система быстрого монтажа RFS**

*Supapă dreaptă cu dublă etanșare o.r. pentru conductă din cupru sau polietilenă – Garnitură RFS pe radiator**

*Válvula manual recta Jet-Line, conexión adaptador Standar RBM para tubo de cobre, polietileno y multicapa y autojunta RFS**

*Gerades Ventil mit doppelter OR-Dichtung für Kupfer- oder Polyethylenrohr - Dichtung RFS auf Heizkörper**

Code Code Артикул Cod Código Code	Size Taille Размер Dimensiune Medida Abmessung	EURO EURO EURO EURO EURO EURO	Pack Cond. Уп-ка Ambalaj Caja Verp.
588.03.00	3/8" RFS	-	10
588.04.00	1/2" RFS	-	10

Straight valve with double seal o-ring for copper or polyethylene pipe

Vanne droite à double joint torique pour tube cuivre ou polyéthylène

Прямой клапан с двойным уплотнительным кольцом OR для медных и полиэтиленовых труб

Supapă dreaptă cu dublă etanșare o.r. pentru conductă din cupru sau polietilenă

Válvula manual recta Jet-Line, conexión adaptador Standard RBM para tubo de cobre, polietileno y multicapa

Gerades Ventil mit doppelter OR-Dichtung für Kupfer- oder Polyethylenrohr

Code Code Артикул Cod Código Code	Size Taille Размер Dimensiune Medida Abmessung	EURO EURO EURO EURO EURO EURO	Pack Cond. Уп-ка Ambalaj Caja Verp.
588.03.40	3/8"	-	10
588.04.40	1/2"	-	10

System side standard RBM thread W 24.5x19F

jet-line

Use fittings with Standard RBM thread (see page 10.00) for the pipe connections.

100% MADE IN ITALY

564

Angle lockshield regulating valve for copper or polyethylene pipe, standard RBM connection, "jet-line" series.

Nickel plated brass body.
Seals in ethylene-propylene elastomer {(EPDM) and nitrile elastomer (NBR).
Shockproof ABS handwheel.
Threaded angled standard RBM connection for copper, polyethylene, multi-layer pipe fittings.
Connection to threaded terminal M UNI-EN-ISO 228 (with pre-gasket ogive in PTFE series *).

- Max temperature 110°C
- Max operating pressure 1000 kPa

Angle lockshield regulating valve for copper or polyethylene pipe - RFS seal on radiator*

*Détendeur de régulation en angle pour tube cuivre ou polyéthylène - Garniture RFS sur le radiateur**

*Угловой настроечный клапан для медных или полиэтиленовых труб - Система быстрого монтажа RFS**

*Acționator de reglare cu cot pentru conductă din cupru sau polietilenă – Garnitură RFS pe radiator**

*Detentor escuadra Jet-Line, conexión adaptador Standar RBM para tubo de cobre, polietileno y multicapa y autojunta RFS**

*Rücklaufverschraubung zur Einstellung gewinkelt für Kupfer- oder Polyethylenrohr - Dichtung RFS auf Heizkörper**

Code Code Артикул Cod Código Code	Size Taille Размер Dimensiune Medida Abmessung	EURO EURO EURO EURO EURO EURO	Pack Cond. Уп-ка Ambalaj Caja Verp.
564.03.00	3/8" RFS	-	10
564.04.00	1/2" RFS	-	10

Angle lockshield regulating valve for copper or polyethylene pipe

Détendeur de régulation en angle pour tube cuivre ou polyéthylène

Угловой настроечный клапан для медных или полиэтиленовых труб

Acționator de reglare cu cot pentru conductă din cupru sau polietilenă

Detentor escuadra Jet-Line, conexión adaptador Standard RBM para tubo de cobre, polietileno y multicapa

Rücklaufverschraubung zur Einstellung Winkel für Kupfer- oder Polyethylenrohr

Code Code Артикул Cod Código Code	Size Taille Размер Dimensiune Medida Abmessung	EURO EURO EURO EURO EURO EURO	Pack Cond. Уп-ка Ambalaj Caja Verp.
564.03.40	3/8"	-	10
564.04.40	1/2"	-	10

System side standard RBM thread W 24.5x19F

jet-line

Use fittings with Standard RBM thread (see page 10.00) for the pipe connections.

565

Straight lockshield regulating valve for copper or polyethylene pipe, standard RBM connection, "jet-line" series.

Nickel plated brass body
Seals in ethylene-propylene elastomer (EPDM) and nitrile elastomer(NBR).
Shockproof ABS handwheel.
Threaded straight standard RBM connection, for copper, polyethylene, multi-layer pipe fittings.
Connection to threaded terminal M UNI-EN-ISO 228 (with pre-gasket ogive in PTFE series *).

- Max temperature 110°C
- Max operating pressure 1000 kPa

Straight lockshield regulating valve for copper or polyethylene pipe - RFS seal on radiator*

*Détendeur de régulation droit pour tube cuivre ou polyéthylène - Garniture RFS sur le radiateur**

*Прямой настроечный клапан для медных или полиэтиленовых труб - Система быстрого монтажа RFS**

*Acționator de reglare drept pentru conductă din cupru sau polietilenă – Garnitură RFS pe radiator**

*Detentor recto Jet-Line, conexión adaptador Standar RBM para tubo de cobre, polietileno y multicapa y autojunta RFS**

*Rücklaufverschraubung zur Einstellung gerade für Kupfer- oder Polyethylenrohr - Dichtung RFS auf Heizkörper**

Code Code Артикул Cod Código Code	Size Taille Размер Dimensiune Medida Abmessung	EURO EURO EURO EURO EURO EURO	Pack Cond. Уп-ка Ambalaj Caja Verp.
565.03.00	3/8" RFS	-	10
565.04.00	1/2" RFS	-	10

Straight lockshield regulating valve for copper or polyethylene pipe

Détendeur de régulation droit pour tube cuivre ou polyéthylène

Прямой настроечный клапан для медных или полиэтиленовых труб

Acționator de reglare drept pentru conductă din cupru sau polietilenă

Detentor recto Jet-Line, conexión adaptador Standard RBM para tubo de cobre, polietileno y multicapa

Rücklaufverschraubung zur Einstellung gerade für Kupfer- oder Polyethylenrohr

Code Code Артикул Cod Código Code	Size Taille Размер Dimensiune Medida Abmessung	EURO EURO EURO EURO EURO EURO	Pack Cond. Уп-ка Ambalaj Caja Verp.
565.03.40	3/8"	-	10
565.04.40	1/2"	-	10

System side standard RBM thread W 24.5x19F

jet-line

Use fittings with Standard RBM thread (see page 10.00) for the pipe connections.

100% MADE IN ITALY

RBM

25

Single flow 4-way valve for single pipe circuits.

Nickel plated brass body.
Seals in ethylene-propylene elastomer and nitrile elastomer.
Shockproof ABS handwheel.
Internal bypass with fixed leakage.
Polymer probe
In-line connections, centre distance 37 mm M standard RBM thread for copper, polyethylene and multilayer pipe fittings.
Threaded radiator connection M UNI-EN-ISO 228.

- Max temperature 110°C
- Max operating pressure 1000 kPa
- Probe length 300 mm
- Probe outside diameter 15 mm

■ Technical drawing, page 11.14

4-way valve for single pipe circuits
Vanne à 4 voies pour installations monotube
Четырёхходовой клапан для однотрубных систем
Supapă cu 4 canale pentru instalații cu o singură conductă
Válvula monotubo manual "Monoflusso", niquelada, conexiones para adaptador Standard RBM para tubo de cobre, polietileno y multicapa
4-Wege Ventil für Einzelrohranlagen

Code Code Артикул Cod Código Code	Size Taille Размер Dimensiune Medida Abmessung	Model Modèle Модель Model Modelo Modell	EURO EURO EURO EURO EURO EURO	Pack Cond. Уп-ка Ambalaj Caja Verp.
25.05.00	3/4"	Monoflusso	-	5
25.05.10	3/4" Ø 18 (*)	Monoflusso	-	5
25.05.50	3/4" SX	Monoflusso	-	5
25.06.00	1"	Monoflusso	-	5
25.06.10	1" Ø 18 (*)	Monoflusso	-	5
25.06.50	1" SX	Monoflusso	-	5

(*): Can only be fed by oØ 18 mm copper pipes
LH: Left thread radiator connection

010

Use fittings with Standard RBM thread (see page 10.00) for the pipe connections.

RBM

22

"Uniflux" 4-way valve for single pipe circuits.

Nickel plated brass body.
Seals in ethylene-propylene elastomer and nitrile elastomer.
Shockproof ABS handwheel.
Internal bypass with fixed leakage.
Polymer probe
In-line connections, centre distance 37 mm M standard RBM thread for copper, polyethylene and multilayer pipe fittings.
Threaded radiator connection M UNI-EN-ISO 228.

- Max temperature 110°C
- Max operating pressure 1000 kPa
- Probe length 300 mm
- Probe outside diameter size 1/2" 10 mm
- Probe outside diameter size 3/4" 13 mm

■ Technical drawing, page 11.14

4-way valve for single pipe circuits
Vanne à 4 voies pour installations monotube
Четырёхходовой клапан для однотрубных систем
Supapă cu 4 canale pentru instalații cu o singură conductă
Válvula monotubo manual "Uniflux", niquelada, conexiones para adaptador Standard RBM para tubo de cobre, polietileno y multicapa
4-Wege Ventil für Einzelrohranlagen

Code Code Артикул Cod Código Code	Size Taille Размер Dimensiune Medida Abmessung	Model Modèle Модель Model Modelo Modell	EURO EURO EURO EURO EURO EURO	Pack Cond. Уп-ка Ambalaj Caja Verp.
22.04.00	1/2"	Uniflux	-	5
22.04.20	1/2"	Uniflux s.c.	-	5
22.05.00	3/4"	Uniflux	-	5
22.05.30	3/4" Ø 18 (*)	Uniflux	-	5

(*): Can only be fed by oØ 18 mm copper pipes

010

Use fittings with Standard RBM thread (see page 10.00) for the pipe connections.

RBM

585

"Biflux" 4-way valve for single pipe circuits.

Nickel plated brass body.
Seals in ethylene-propylene elastomer and nitrile elastomer.
Shockproof ABS handwheel.
Internal bypass with fixed leakage.
Polymer probe
In-line connections, centre distance 37 mm M standard RBM thread for copper, polyethylene and multilayer pipe fittings.
Threaded radiator connection M UNI-EN-ISO 228.

- Max temperature 110°C
- Max operating pressure 1000 kPa
- Probe length 100 mm
- Probe outside diameter 11 mm

■ Technical drawing, page 11.14

4-way valve for single pipe circuits
Vanne à 4 voies pour installations monotube
Четырёхходовой клапан для однотрубных систем
Supapă cu 4 canale pentru instalații cu o singură conductă
Válvula monotubo manual "Biflux", niquelada, conexiones para adaptador Standard RBM para tubo de cobre, polietileno y multicapa
4-Wege Ventil für Einzelrohranlagen

Code Code Артикул Cod Código Code	Size Taille Размер Dimensiune Medida Abmessung	Model Modèle Модель Model Modelo Modell	EURO EURO EURO EURO EURO EURO	Pack Cond. Уп-ка Ambalaj Caja Verp.
585.04.00	1/2"	Biflux	-	5
585.04.10	1/2" Ø 18 (*)	Biflux	-	5
585.05.00	3/4"	Biflux	-	5
585.05.10	3/4" Ø 18 (*)	Biflux	-	5

(*): Can only be fed by oØ 18 mm copper pipes

010

Use fittings with Standard RBM thread (see page 10.00) for the pipe connections.

100% MADE IN ITALY

1028

"Termoflux" 4-way valve with thermostatic option for single pipe circuits.

Nickel plated brass body.
Built-in micrometric lockshield valve.
Seals in ethylene-propylene elastomer and nitrile elastomer.
Shockproof ABS cap and handwheel.
Polymer probe.
In-line connections, centre distance 37 mm M standard RBM thread for copper, polyethylene and multilayer pipe fittings.
Threaded radiator connection M UNI-EN-ISO 228.

- Max temperature 110°C
- Max operating pressure 1000 kPa
- Probe length 295 mm
- Probe outside diameter size 1/2" 10 mm
- Probe outside diameter size 3/4" 13 mm

■ Technical drawing, page 11.14

4-way valve with thermostatic option for single pipe circuits
Vanne à 4 voies thermostatique pour installations monotube
Терморегулирующий четырёхходовой клапан для однотрубных систем
Supapă cu 4 canale cu posibilitate de reglare termostatică pentru instalații cu o singură conductă
Válvula monotubo termostatizable "Termoflux", niquelada, conexiones para adaptador Standard RBM para tubo de cobre, polietileno y multicapa
Thermostierbares 4-Wege-Ventil für Einzelrohranlagen

Code Code Артикул Cod Código Code	Size Taille Размер Dimensiune Medida Abmessung	Model Modèle Модель Model Modelo Modell	EURO EURO EURO EURO EURO EURO	Pack Cond. Уп-ка Ambalaj Caja Verp.
1028.04.00	1/2"	Termoflux	-	4
1028.05.00	3/4"	Termoflux	-	4

Liquid expansion thermostatic command.

Use fittings with Standard RBM thread (see page 10.00) for the pipe connections.

010

754

4-way valve with thermostatic option for radiator.

Nickel plated brass body.
Seals in ethylene-propylene elastomer and nitrile elastomer.
Shockproof ABS cap and handwheel.
Brass probe.
Built-in micrometric lockshield valve.
In-line connections, centre distance 37 mm M standard RBM thread for copper, polyethylene and multilayer pipe fittings.
Threaded radiator connection M UNI-EN-ISO 228 with pre-gasket ogive in PTFE.

- Max temperature 110°C
- Max operating pressure 1000 kPa
- Kv mod. with thermostatic option 1.80 m3/h
- Kv mod. thermostatic 1.44 m3/h
- Probe length 300 mm
- Probe outside diameter. 10 mm
- Flow rate at radiator Adjustable bypass

■ Technical drawing, page 11.14

4-way valves with thermostatic option for single pipe - double pipe circuits
Vanne à 4 voies thermostatique pour installations bi-tube - monotube
Терморегулирующий четырёхходовой клапан для однотрубных и двухтрубных систем
Supapă cu 4 canale cu posibilitate de reglare termostatică pentru instalații cu două - o conductă/e
Válvula monotubo-bitubo termostatizable vertical, niquelada, conexiones para adaptador Standard RBM para tubo de cobre, polietileno y multicapa
Thermostierbares 4-Wege-Ventil für Doppel- und Einzelrohranlagen

Code Code Артикул Cod Código Code	Size Taille Размер Dimensiune Medida Abmessung	Model Modèle Модель Model Modelo Modell	EURO EURO EURO EURO EURO EURO	Pack Cond. Уп-ка Ambalaj Caja Verp.
754.04.00	1/2"		-	4

For connection to radiators.

Liquid expansion thermostatic command.

Use fittings with Standard RBM thread (see page 10.00) for the pipe connections.

010

424

"Uniflux" 4-way valve for single pipe circuits with external probe.

Nickel plated brass body.
Seals in ethylene-propylene elastomer and nitrile elastomer.
Shockproof ABS handwheel.
Internal bypass with fixed leakage.
In-line connections, centre distance 37 mm M standard RBM thread for copper, polyethylene and multilayer pipe fittings.
Threaded radiator connection M UNI-EN-ISO 228.
Connections for external probe Ø 10 or Ø 15.

- Max temperature 110°C
- Max operating pressure 1000 kPa
- Probe not included.

■ Technical drawing, page 11.14

"Uniflux" 4-way valve for single pipe circuits with external probe
Vanne "uniflux" à 4 voies à sonde externe pour installations monotube
Четырёхходовой клапан "uniflux" с внешним зондом для однотрубных систем
Supapă "uniflux" cu 4 canale cu sondă externă pentru instalații cu o singură conductă
Grupo monotubo manual "uniflux", niquelado, conexiones para adaptador Standard RBM para tubo de cobre, polietileno y multicapa
4-Wege-Ventil "Uniflex" mit externer Sonde für Einzelrohranlagen

Code Code Артикул Cod Código Code	Size Taille Размер Dimensiune Medida Abmessung	Model Modèle Модель Model Modelo Modell	EURO EURO EURO EURO EURO EURO	Pack Cond. Уп-ка Ambalaj Caja Verp.
424.04.70	1/2"	Uniflux S.E. Ø 10	-	4
424.04.90	1/2"	Uniflux S.E. Ø 15	-	4

Radiator side hot fluid inlet.

Use fittings with Standard RBM thread (see page 10.00) for the pipe connections.

010

100% MADE IN ITALY

22

"Uniflux" 4-way valve for single pipe circuits with external probe.

Nickel plated brass body.
Seals in ethylene-propylene elastomer and nitrile elastomer.
Shockproof ABS handwheel.
Internal bypass with fixed leakage.
In-line connections, centre distance 37 mm M standard RBM thread for copper, polyethylene and multilayer pipe fittings.
Threaded radiator connection M UNI-EN-ISO 228.
Connections for external probe Ø 15.

- Max temperature 110°C
- Max operating pressure 1000 kPa
- Probe not included.

■ Technical drawing, page 10.00

"Uniflux" 4-way valve for single pipe circuits with external probe

Vanne "uniflux" à 4 voies à sonde externe pour installations monotube

Четырёхходовой клапан "uniflux" с внешним зондом для однотрубных систем

Supapă "uniflux" cu 4 canale cu sondă externă pentru instalații cu o singură conductă

Grupo monotubo manual "uniflux", niquelado, conexiones para adaptador Standard RBM para tubo de cobre, polietileno y multicapa

4-Wege-Ventil "Uniflex" mit externer Sonde für Einzelrohranlagen

Code Code Артикул Cod Código Code	Size Taille Размер Dimensiune Medida Abmessung	Model Modèle Модель Model Modelo Modell	EURO EURO EURO EURO EURO EURO	Pack Cond. Уп-ка Ambalaj Caja Verp.
22.04.90	1/2"	Uniflux S.E. Ø 15	-	4

Hot fluid inlet opposite radiator side.

Use fittings with Standard RBM thread (see page 10.00) for the pipe connections.

010

223

Kit for heating units fed by single pipe and double pipe circuits.

Nickel plated brass body.
Seals in ethylene-propylene elastomer and nitrile elastomer.
Shockproof ABS cap and handwheel.
Built-in micrometric lockshield valve.
Internal bypass with 50% bore only for single pipe applications.
In-line connections, centre distance 37 mm M standard RBM thread for copper, polyethylene and multilayer pipe fittings.
Connections for external probe Ø 15 mm
Threaded connections to terminal M UNI-EN-ISO 228 with pre-gasket ogive in PTFE.

- Max temperature 110°C
- Max operating pressure 1000 kPa
- Probe not included.

■ Technical drawing, page 11.15

Diverter valve + straight valve with thermostatic option 1/2" for single pipe and double pipe circuits kit

Kit déviatrice + thermostatique droite de ½ pour installations monotube et bi-tube

Комплект: узел нижнего подключения + терморегулирующий прямой клапан 1/2" для однотрубных и двухтрубных систем

Kit deviator + versiune reglare termostatică dreaptă de 1/2" pentru instalații cu o/două conductă/e

Grupo monotubo-bitubo termostatizable recto, con válvula termostatizable recta, conexiones para adaptador Standard RBM para tubo de cobre, polietileno y multicapa

Verzweigerbausatz + thermostabilisierbar gerade zu 1/2" für Einzel- und Doppelrohranlagen

Code Code Артикул Cod Código Code	Size Taille Размер Dimensiune Medida Abmessung	Model Modèle Модель Model Modelo Modell	EURO EURO EURO EURO EURO EURO	Pack Cond. Уп-ка Ambalaj Caja Verp.
223.04.50	1/2"	Kit-50%*	-	1
223.04.00	1/2"	Kit-100%**	-	1

* Single pipe circuits
**Double pipe circuits

Floor or baseboard distribution in-line power supply connections.

Use fittings with Standard RBM thread (see page 10.00) for the pipe connections.

010

225

Kit for heating units fed by single pipe and double pipe circuits.

Nickel plated brass body.
Seals in ethylene-propylene elastomer and nitrile elastomer.
Shockproof ABS cap and handwheel.
Built-in micrometric lockshield valve.
Internal bypass with 50% bore only for single pipe applications.
In-line connections, centre distance 37 mm M standard RBM thread for copper, polyethylene and multilayer pipe fittings.
Connections for external probe Ø 15 mm
Threaded connections to terminal M UNI-EN-ISO 228 with pre-gasket ogive in PTFE.

- Max temperature 110°C
- Max operating pressure 1000 kPa
- Probe not included.

■ Technical drawing, page 11.15

Diverter valve + inverse valve with thermostatic option 1/2" for single pipe and double pipe circuits kit

Kit déviatrice + thermostatique inversée de ½ pour installations monotube et bi-tube

Комплект: узел нижнего подключения + терморегулирующий осевой клапан 1/2" для однотрубных и двухтрубных систем

Kit deviator + versiune reglare termostatică inversă de 1/2" pentru instalații cu o/două conductă/e

Grupo monotubo-bitubo termostatizable recto, con válvula termostatizable inversa, conexiones para adaptador Standard RBM para tubo de cobre, polietileno y multicapa

Verzweigerbausatz + thermostabilisierbar Umkehrung zu 1/2" für Einzel- und Doppelrohranlagen

Code Code Артикул Cod Código Code	Size Taille Размер Dimensiune Medida Abmessung	Model Modèle Модель Model Modelo Modell	EURO EURO EURO EURO EURO EURO	Pack Cond. Уп-ка Ambalaj Caja Verp.
225.04.50	1/2"	Kit-50%*	-	1
225.04.00	1/2"	Kit-100%**	-	1

* Single pipe circuits
**Double pipe circuits

Floor or baseboard distribution in-line power supply connections.

Use fittings with Standard RBM thread (see page 10.00) for the pipe connections.

010

100% MADE IN ITALY

249

Kit for heating units fed by single pipe and double pipe circuits.

Nickel plated brass body.
Seals in ethylene-propylene elastomer and nitrile elastomer.
Shockproof ABS cap and handwheel.
Built-in micrometric lockshield valve.
Internal bypass with 50% bore only for single pipe applications.
In-line connections, centre distance 37 mm M standard RBM thread for copper, polyethylene and multilayer pipe fittings.
Connections for external probe Ø 15 mm
Threaded connections to terminal M UNI-EN-ISO 228 with pre-gasket ogive in PTFE.

- Max temperature 110°C
- Max operating pressure 1000 kPa
- Probe not included.

■ Technical drawing, page 11.15

Diverter valve kit + manual angle valve 1/2" for single pipe and double pipe circuits

Kit déviatrice + vanne en angle manuelle de 1/2" pour installations mono-tube et bi-tube

Комплект: узел нижнего подключения + угловой ручной клапан 1/2 для однотрубных и двухтрубных систем

Kit deviator + supapă cu cot manuală de 1/2 pentru instalații cu o singură/ două conductă/e

Grupo monotubo-bitubo termostatizable recto, con válvula termostatizable escuadra, conexiones para adaptador Standard RBM para tubo de cobre, polietileno y multicapa

Verzweigerbausatz + manuelles Ventil gewinkelt zu 1/2 für Einzel- und Doppelrohranlagen

Code Code Артикул Cod Código Code	Size Taille Размер Dimensiune Medida Abmessung	Model Modèle Модель Model Modelo Modell	EURO EURO EURO EURO EURO EURO	Pack Cond. Уп-ка Ambalaj Caja Verp.
249.04.50	1/2"	Kit-50%*	-	1
249.04.00	1/2"	Kit-100%**	-	1

* Single pipe circuits
**Double pipe circuits

Floor or baseboard distribution in-line power supply connections.

Use fittings with Standard RBM thread (see page 10.00) for the pipe connections.

010

211

Kit for heating units fed by single pipe and double pipe circuits.

Nickel plated brass body.
Seals in ethylene-propylene elastomer and nitrile elastomer.
Shockproof ABS cap and handwheel.
Built-in micrometric lockshield valve.
Internal bypass with 50% bore only for single pipe applications.
Angle connections, centre distance 37 mm M standard RBM thread for copper, polyethylene and multilayer pipe fittings.
Connections for external probe Ø 15 mm
Threaded connections to terminal M UNI-EN-ISO 228 with pre-gasket ogive in PTFE.

- Max temperature 110°C
- Max operating pressure 1000 kPa
- Probe not included.

■ Technical drawing, page 11.15

Diverter angle valve + straight valve with thermostatic option 1/2" for single pipe and double pipe circuits kit

Kit déviatrice en angle + thermostatique droite de ½ pour installations monotube et bi-tube

Комплект: узел нижнего подключения + терморегулирующий прямой клапан 1/2" для однотрубных и двухтрубных систем

Kit deviator cu cot+ versiune reglare termostatică dreaptă de 1/2" pentru instalații cu o singură/două conductă/e

Grupo monotubo-bitubo termostatizable escuadra, con válvula termostatizable recta, conexiones para adaptador Standard RBM para tubo de cobre, polietileno y multicapa

Verzweigerbausatz Winkel + thermostabilisierbar gerade zu 1/2" für Einzel- und Doppelrohranlagen

Code Code Артикул Cod Código Code	Size Taille Размер Dimensiune Medida Abmessung	Model Modèle Модель Model Modelo Modell	EURO EURO EURO EURO EURO EURO	Pack Cond. Уп-ка Ambalaj Caja Verp.
211.04.50	1/2"	Kit-50%*	-	1
211.04.00	1/2"	Kit-100%**	-	1

* Single pipe circuits
**Double pipe circuits

Angle connections fed from wall

Use fittings with Standard RBM thread (see page 10.00) for the pipe connections.

010

213

Kit for heating units fed by single pipe and double pipe circuits.

Nickel plated brass body.
Seals in ethylene-propylene elastomer and nitrile elastomer.
Shockproof ABS cap and handwheel.
Built-in micrometric lockshield valve.
Internal bypass with 50% bore only for single pipe applications.
Angle connections, centre distance 37 mm M standard RBM thread for copper, polyethylene and multilayer pipe fittings.
Connections for external probe Ø 15 mm
Threaded connections to terminal M UNI-EN-ISO 228 with pre-gasket ogive in PTFE.

- Max temperature 110°C
- Max operating pressure 1000 kPa
- Probe not included.

■ Technical drawing, page 11.16

Diverter angle valve + inverse angle valve with thermostatic option 1/2" for single pipe and double pipe circuits kit

Kit déviatrice en angle + thermostatique inversée de ½ pour installations monotube et bi-tube

Комплект: узел нижнего подключения + терморегулирующий осевой клапан 1/2" для однотрубных и двухтрубных систем

Kit deviator cu cot+ versiune reglare termostatică inversă de 1/2" pentru instalații cu o/două conductă/e

Grupo monotubo-bitubo termostatizable escuadra, con válvula termostatizable inversa, conexiones para adaptador Standard RBM para tubo de cobre, polietileno y multicapa

Verzweigerbausatz Winkel + thermostabilisierbares 4-Wege-Ventil Umkehrung zu 1/2" für Einzel- und Doppelrohranlagen

Code Code Артикул Cod Código Code	Size Taille Размер Dimensiune Medida Abmessung	Model Modèle Модель Model Modelo Modell	EURO EURO EURO EURO EURO EURO	Pack Cond. Уп-ка Ambalaj Caja Verp.
213.04.50	1/2"	Kit-50%*	-	1
213.04.00	1/2"	Kit-100%**	-	1

* Single pipe circuits
**Double pipe circuits

Angle connections fed from wall.

Use fittings with Standard RBM thread (see page 10.00) for the pipe connections.

010

100% MADE IN ITALY

212

Kit for heating units fed by single pipe and double pipe circuits.

Nickel plated brass body.
Seals in ethylene-propylene elastomer and nitrile elastomer.
Shockproof ABS cap and handwheel.
Built-in micrometric lockshield valve.
Internal bypass with 50% bore only for single pipe applications.
Angle connections, centre distance 37 mm M standard RBM thread for copper, polyethylene and multilayer pipe fittings.
Connections for external probe Ø 15 mm
Threaded connections to terminal M UNI-EN-ISO 228 with pre-gasket ogive in PTFE.

- Max temperature 110°C
- Max operating pressure 1000 kPa
- Probe not included.

■ Technical drawing, page 11.16

Diverter angle valve kit + manual angle valve 1/2" for single pipe and double pipe circuits

Kit déviatrice en angle + vanne en angle manuelle de 1/2" pour installations monotube et bi-tube

Комплект: узел нижнего подключения + угловой ручной клапан 1/2" для однотрубных и двухтрубных систем

Kit deviator cu cot+ supapă cu cot manuală de 1/2" pentru instalații cu o singură/două conductă/e

Grupo monotubo-bitubo termostatizable escuadra, con válvula termostatizable escuadra, conexiones para adaptador Standard RBM para tubo de cobre, polietileno y multicapa

Verzweigerbausatz Winkel + manuelles Ventil gewinkelt zu 1/2" für Einzel- und Doppelrohranlagen

Code Code Артикул Cod Código Code	Size Taille Размер Dimensiune Medida Abmessung	Model Modèle Модель Model Modelo Modell	EURO EURO EURO EURO EURO EURO	Pack Cond. Уп-ка Ambalaj Caja Verp.
212.04.50	1/2"	Kit-50%*	-	1
212.04.00	1/2"	Kit-100%**	-	1

* Single pipe circuits
**Double pipe circuits

Angle connections fed from wall.

Use fittings with Standard RBM thread (see page 10.00) for the pipe connections.

010

165

Straight 4-way diverter valve for single pipe and the double pipe circuits.

Nickel plated brass body.
Seals in ethylene-propylene elastomer and nitrile elastomer.
Shockproof ABS cap.
Built-in micrometric lockshield valve.
Internal bypass with 50% bore only for single pipe applications.
In-line connections, centre distance 37 mm M standard RBM thread for copper, polyethylene and multilayer pipe fittings.
Threaded connections to radiator M UNI-EN-ISO 228 with pre-gasket ogive in PTFE.
Connection for external probe Ø 15 mm.

- Max temperature 110°C
- Max operating pressure 1000 kPa

■ Technical drawing, page 11.16

4-way straight diverter valve for single pipe and double pipe circuits

Vanne déviatrice à 4 voies droite pour installations monotube et bi-tube

Прямой узел нижнего подключения с четырьмя выходами для однотрубных и двухтрубных систем

Supapă deviatoare cu 4 canale directă pentru instalații cu o singură/două conductă/e

Válvula monotubo-bitubo termostatizable recta, niquelada, conexiones para adaptador Standard RBM para tubo de cobre, polietileno y multicapa

4-Wege-Verzwigerventil gerade für Einzel- und Doppelrohranlagen

Code Code Артикул Cod Código Code	Size Taille Размер Dimensiune Medida Abmessung	Model Modèle Модель Model Modelo Modell	EURO EURO EURO EURO EURO EURO	Pack Cond. Уп-ка Ambalaj Caja Verp.
165.04.50	1/2"	50%*	-	10
160.04.00	1/2"	100%**	-	10

* Single pipe circuits
**Double pipe circuits

Use fittings with Standard RBM thread (see page 10.00) for the pipe connections.

010

214

Angle 4-way diverter valve for single pipe and the double pipe circuits.

Nickel plated brass body.
Seals in ethylene-propylene elastomer and nitrile elastomer.
Shockproof ABS cap.
Built-in micrometric lockshield valve.
Internal bypass with 50% bore only for single pipe applications.
Angle connections, centre distance 37 mm M standard RBM thread for copper, polyethylene and multilayer pipe fittings.
Threaded connections to radiator M UNI-EN-ISO 228 with pre-gasket ogive in PTFE.
Connection for external probe Ø 15 mm.

- Max temperature 110°C
- Max operating pressure 1000 kPa

■ Technical drawing, page 11.16

4-way angle diverter valve for single pipe and double pipe circuits

Vanne déviatrice à 4 voies en angle pour installations monotube et bi-tube

Угловой узел нижнего подключения с четырьмя выходами для однотрубных и двухтрубных систем

Supapă deviatoare cu 4 canale cu cot pentru instalații cu o singură/două conductă/e

Válvula monotubo-bitubo termostatizable escuadra, niquelada, conexiones para adaptador Standard RBM para tubo de cobre, polietileno y multicapa

4-Wege-Verzwigerventil gewinkelt für Einzel- und Doppelrohranlagen

Code Code Артикул Cod Código Code	Size Taille Размер Dimensiune Medida Abmessung	Model Modèle Модель Model Modelo Modell	EURO EURO EURO EURO EURO EURO	Pack Cond. Уп-ка Ambalaj Caja Verp.
214.04.50	1/2"	50%*	-	10
214.04.00	1/2"	100%**	-	10

* Single pipe circuits
**Double pipe circuits

Use fittings with Standard RBM thread (see page 10.00) for the pipe connections.

010

100% MADE IN ITALY

177

Elbow fitting for valve-pipe connection.

Nickel plated brass body.
Ethylene-propylene elastomer seals.
Threaded pipe connection M standard RBM for copper, polyethylene and multilayer pipe fittings.
Connection to valve with threaded F standard RBM fitting.

- Max temperature 110°C
- Max operating pressure 1000 kPa

Elbow fitting for valve-pipe connection
Raccord coudé pour raccordement vanne conduite
Угловой фитинг для присоединения клапана к трубе
Racord curbat pentru conexiune supapă sistem de conducte
Racor curvo para válvulas de unidades terminales, conexiones para adaptador Standard rbm para tubo de cobre, polietileno y multicapa
Anschlussbogen für Anschluss Rohrleitungsventil

Code Code Артикул Cod Código Code	Size Taille Размер Dimensiune Medida Abmessung	Figure Figure Рисунок Figura Figura Abbildung	EURO EURO EURO EURO EURO EURO	Pack Cond. Уп-ка Ambalaj Caja Verp.
177.00.00	int. 32	2	-	20
177.00.10	int. 60	1	-	20

For distribution outside of baseboard.

Valve-pipe connection.

Use fittings with Standard RBM thread (see page 10.00) for the pipe connections.

041

700

Elbow fitting for valve-pipe connection.

Nickel plated copper body.
Pipe side fitting in nickel plated brass.
Threaded pipe connection M standard RBM for copper, polyethylene and multilayer pipe fittings (excluding fitting).
Valve side connection for compression fittings ø 14 mm (excluding fitting).
Valve-connection centre distance 50mm

- Max temperature 110°C
- Max operating pressure 1000 kPa

Elbow fitting for valve-pipe connection
Raccord coudé pour raccordement vanne conduite
Угловой фитинг для соединения клапана к трубе
Racord curbat pentru conexiune supapă sistem de conducte
Codo 90º con tubo de cobre niquelado para válvulas de unidades terminales, conexión para adaptador Standard RBM para tubo de cobre, polietileno y multicapa
Anschlussbogen für Anschluss Rohrleitungsventil

Code Code Артикул Cod Código Code	Size A Dimension A Размер A Dimensiunea A Medida A Abmessung A	Size B Dimension B Размер B Dimensiunea B Medida B Abmessung B	EURO EURO EURO EURO EURO EURO	Pack Cond. Уп-ка Ambalaj Caja Verp.
700.14.00	50 mm	Ø 14 mm	-	15

Suitable for valve-pipe connection with connections located behind radiator.

041

308

Single hole plastic openable washer.

Application flush with the wall for aesthetic closure of pipe passage hole.

- Washer outside diameter 60 mm

Single hole washer
Rondelle mono-trou
Декоративная чашка
Rozetă cu un singur orificiu
Florón simple Ø60mm, en plástico
Einloch-Unterlegscheibe

Code Code Артикул Cod Código Code	Size Taille Размер Dimensiune Medida Abmessung	EURO EURO EURO EURO EURO EURO	Pack Cond. Уп-ка Ambalaj Caja Verp.
308.10.02	Ø 10	-	100
308.12.02	Ø 12	-	100
308.14.02	Ø 14	-	100
308.16.02	Ø 16	-	100
308.18.02	Ø 18	-	100
308.00.12	*	-	100

* Universal

041

308

Double hole plastic openable washer.

Application flush with the wall for aesthetic closure of pipe passage hole.

- External dimensions 98x48 mm
- Hole centre distance 37 mm

Double hole washer
Rondelle bi-trou
Декоративная чашка
Rozetă cu două orificii
Florón doble en plástico
Zweiloch-Unterlegscheibe

Code Code Артикул Cod Código Code	Size Taille Размер Dimensiune Medida Abmessung	EURO EURO EURO EURO EURO EURO	Pack Cond. Уп-ка Ambalaj Caja Verp.
308.00.02	*	-	50

* Universal

Suitable for all Single flow and Double flow centre distance 37 mm valves

041

100% MADE IN ITALY

175

Nickel plated brass elbow fitting.

Threaded F standard RBM connection for RBM valves. Threaded connection M UNI-EN-ISO 228 with pre-gasket ogive in PTFE.

Elbow fitting
Raccord coudé
Фитинг угловой
Racord curbat
Racor curvo para grupo monotubo-bitubo, conexiones para adaptador Standard RBM para tubo de cobre, polietileno y multicapa
Anschlussbogen

Code Code Артикул Cod Código Code	Size Taille Размер Dimensiune Medida Abmessung	EURO EURO EURO EURO EURO EURO	Pack Cond. Уп-ка Ambalaj Caja Verp.
175.04.00	1/2" RFS	-	20

041

310

Chrome plated steel probe with end not countersunk.

- Max temperature 110°C
- Max operating pressure 1000 kPa

Chrome plated steel probe
Sonde en acier chromé
Зонд из хромированной стали
Sondă din oţel cromată
Tubo en acero cromado para grupo monotubo-bitubo
Sonde aus verchromtem Stahl

Code Code Артикул Cod Código Code	Size - ØxL Dimension - ØxL Размер - ØxL Dimensiune - ØxL Medida - ØxL Abmessung - ØxL	Suitable for valve Indiqué pour vanne Подходит для клапана Adecvată pentru supapă Para válvula Geeignet für Ventil	EURO EURO EURO EURO EURO EURO	Pack Cond. Уп-ка Ambalaj Caja Verp.
310.10.60	Ø10 x 600	Uniflux S.E.	-	1
310.10.90	Ø10 x 900	Uniflux S.E.	-	1
310.10.10	Ø10 x 1000	Uniflux S.E.	-	1

041

348

Chrome plated steel probe with end not countersunk.

- Max temperature 110°C
- Max operating pressure 1000 kPa

Chrome plated steel probe
Sonde en acier chromé
Зонд из хромированной стали
Sondă din oţel cromată
Tubo en acero cromado para grupo monotubo-bitubo
Sonde aus verchromtem Stahl

Code Code Артикул Cod Código Code	Size - ØxL Dimension - ØxL Размер - ØxL Dimensiune - ØxL Medida - ØxL Abmessung - ØxL	Suitable for valve Indiqué pour vanne Подходит для клапана Adecvată pentru supapă Para válvula Geeignet für Ventil	EURO EURO EURO EURO EURO EURO	Pack Cond. Уп-ка Ambalaj Caja Verp.
348.15.60	Ø15 x 600	Kit-Uniflux S.E.	-	35
348.15.90	Ø15 x 900	Kit-Uniflux S.E.	-	35
348.15.10	Ø15 x 1000	Kit-Uniflux S.E.	-	35

041

312

Brass steel probe with countersunk end.

- Max temperature 110°C
- Max operating pressure 1000 kPa

Brass probe
Sonde en laiton
Латунный зонд
Sondă din alamă
Tubo en latón para grupo monotubo-bitubo
Sonde aus Messing

Code Code Артикул Cod Código Code	Size - ØxL Dimension - ØxL Размер - ØxL Dimensiune - ØxL Medida - ØxL Abmessung - ØxL	Suitable for valve Indiqué pour vanne Подходит для клапана Adecvată pentru supapă Para válvula Geeignet für Ventil	EURO EURO EURO EURO EURO EURO	Pack Cond. Уп-ка Ambalaj Caja Verp.
312.15.60	Ø15 x 600	Monoflusso	-	1
312.15.90	Ø15 x 900	Monoflusso	-	1

Suitable for 25 series valve.

1138

Thermal insulation made up from expanded polyethylene half-bearings with external antiscratch coating.

Half-bearings fixed with double-sided adhesive tape already applied.

- Fire behaviour class1
- Density 33 kg/m3
- Max operating temperature -40 +90 °C

Angle valve thermal shell
Coque isolante vannes en angle
Теплоизоляционный кожух для угловых клапанов
Carcasă termică supape cu cot
Aislamiento térmico para válvula a escuadra, en polietileno expandido con revestimiento anticondensación
Wärmeschale Eckventile

Code Code Артикул Cod Código Code	Size Taille Размер Dimensiune Medida Abmessung	EURO EURO EURO EURO EURO EURO	Pack Cond. Уп-ка Ambalaj Caja Verp.
1138.00.20	3/4"	-	10

Angle lockshield valves thermal shell
Coque isolante détendeurs en angle
Теплоизоляционный кожух для настроечных угловых клапанов
Carcasă termică acționatoare cu cot
Aislamiento térmico para detentor a escuadra, en polietileno expandido con revestimiento anticondensación
Wärmeschale Eckrücklaufverschraubungen

Code Code Артикул Cod Código Code	Size Taille Размер Dimensiune Medida Abmessung	EURO EURO EURO EURO EURO EURO	Pack Cond. Уп-ка Ambalaj Caja Verp.
1138.00.30	3/4"	-	10

301

Coupled single pipe valves, only for shut-off of radiant plates, equipped with adjustable bypass.

Nickel plated brass body.
Seals in ethylene-propylene and nitrile.
Plate side rotary Euroconus connections F G3/4".
System side Euroconus connections M G3/4".
Connections centre distance 50 mm.

- Max operating pressure 110 °C
- Max operating pressure 1000 kPa

Coupled valve with straight bypass
Vanne couplée avec by-pass droite
Прямой узел нижнего подключения с байпасом
Supapă îmbinată cu by-pass dreaptă
Válvula monotubo recta con by-pass para panel de acero, niquelada, conexión para adaptador Euroconus para tubo de cobre, polietileno y multicapa
Mit Nebenleitung gekoppeltes gerades Ventil

Code Code Артикул Cod Código Code	Size Taille Размер Dimensiune Medida Abmessung	EURO EURO EURO EURO EURO EURO	Pack Cond. Уп-ка Ambalaj Caja Verp.
301.05.10	3/4"	-	5

Coupled valve with angle bypass
Vanne couplée avec by-pass en angle
Угловой узел нижнего подключения с байпасом
Supapă îmbinată cu by-pass cu cot
Válvula monotubo escuadra con by-pass para panel de acero, niquelada, conexión para adaptador Euroconus para tubo de cobre, polietileno y multicapa
Mit Nebenleitung gekoppeltes gewinkeltes Ventil

Code Code Артикул Cod Código Code	Size Taille Размер Dimensiune Medida Abmessung	EURO EURO EURO EURO EURO EURO	Pack Cond. Уп-ка Ambalaj Caja Verp.
302.05.10	3/4"	-	5

Coupled valves for single pipe system centre distance 50 mm.

010

349

Accessories for double pipe and single pipe valves.
Pair of brass reductions to connect radiant plates with connections F 1/2".

Brass body
Nitrile seals.
Euroconus threaded connections M G3/4" x M 1/2"
UNI-EN-ISO 228

- Max operating pressure 110 °C
- Max operating pressure 1000 kPa

Pair of reductions for double pipe and single pipe valves
Paire de réductions pour vannes bi-tube et monotube
Пара переходников для узлов нижнего подключения для однотрубных и двухтрубных систем
Pereche de reducţii pentru supape cu două conducte şi cu o singură conductă
Par reducciones para válvula monotubo o bitubo para panel de acero
Reduzierstückpaar für Zwei- und Einrohrventile

Code Code Артикул Cod Código Code	Size Taille Размер Dimensiune Medida Abmessung	EURO EURO EURO EURO EURO EURO	Pack Cond. Уп-ка Ambalaj Caja Verp.
349.00.00	3/4" x 1/2"	-	1

Tapered seal fitting which can be coupled to the whole series of valves for plates.

010

301

Coupled double pipe valves, only for shut-off of radiant plates.

Nickel plated brass body.
Seals in ethylene-propylene and nitrile.
Plate side rotary Euroconus connections F G3/4".
System side Euroconus connections M G3/4".
Connections centre distance 50 mm.

- Max operating pressure 110 °C
- Max operating pressure 1000 kPa

Coupled valve without straight bypass
Vanne couplée sans by-pass droite
Прямой узел нижнего подключения без байпаса
Supapă îmbinată fără by-pass dreaptă
Válvula bitubo recta para panel de acero, niquelada, conexión para adaptador Euroconus para tubo de cobre, polietileno y multicapa
Ohne Nebenleitung gekoppeltes gerades Ventil

Code Code Артикул Cod Código Code	Size Taille Размер Dimensiune Medida Abmessung	EURO EURO EURO EURO EURO EURO	Pack Cond. Уп-ка Ambalaj Caja Verp.
301.05.80	3/4"	-	1

Coupled valve without angle bypass
Vanne couplée sans by-pass en angle
Угловой узел нижнего подключения без байпаса
Supapă îmbinată fără by-pass cu cot
Válvula bitubo escuadra para panel de acero, niquelada, conexión para adaptador Euroconus para tubo de cobre, polietileno y multicapa
Ojne Nebenleitung gekoppeltes gewinkeltes Ventil

Code Code Артикул Cod Código Code	Size Taille Размер Dimensiune Medida Abmessung	EURO EURO EURO EURO EURO EURO	Pack Cond. Уп-ка Ambalaj Caja Verp.
302.05.80	3/4"	-	1

Coupled valves for double pipe system centre distance 50 mm.

010

100% MADE IN ITALY

MANIFOLDS AND ACCESSORIES

COLLECTEURS ET ACCESSOIRES

КОЛЛЕКТОРЫ И КОМПЛЕКТУЮЩИЕ

COLECTOARE ŞI ACCESORII

COLECTORES Y ACCESORIOS

SAMMLER UND ZUBEHÖR

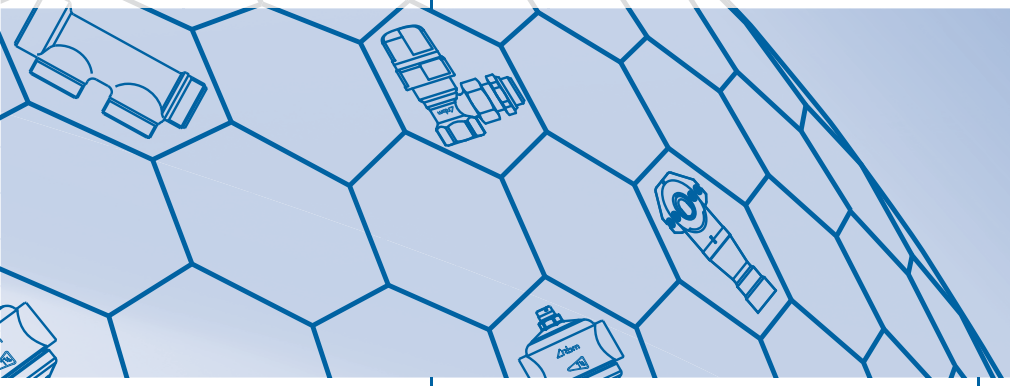

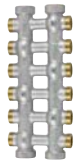

- Single and coplanar *MONOBLOCK* manifolds – RBM standard connection junctions

- Single *MONOBLOCK* – Euroconus G 3/4" junctions

- Single or *MONOBLOCK* manifolds - Jet-Line

- *MONOBLOCK* manifolds for sanitary systems

- Modular manifolds for sanitary systems

- Accessories for heating and sanitary systems

- Modular manifolds for large flow rates

- Fittings/Accessories for modular manifolds with large flow rates

- Valves and accessories for manifolds

- Manifolds kit

34

Manifold, single modular, produced from casting or moulding, with in-line connections and unilateral junctions.

Nickel plated brass body.
Junction connections, centre distance 37 mm threaded M standard RBM, or FG1/2" UNI-EN-ISO 228 for copper, polyethylene and multilayer pipe fittings.
Threaded in-line connections MF UNI-EN-ISO 228.

- Max temperature 110°C
- Max operating pressure 1000 kPa

■ Technical drawing, page 11.17

Module for standard RBM male junctions coplanar single manifold.
Module pour collecteur simple coplanaire dérivations mâle standard RBM
Модуль для компланарных коллекторов, соединения наружные стандарта rbm
Modul pentru colector simplu pe acelaşi plan derivaţii de tip tată standard rbm
Colector simple con conexiones principales Macho-Hembra, conexiones derivaciones Standard RBM
Modul für einfachen Parallelstecksammler Verzweigungen Standard Rbm

Code Code Артикул Cod Código Code	Body size Dimension corps Размер корпуса Dimensiune corp Medida Cuerpo Gehäuseabmessung	N. Ways Nb points de décrochage К-во отводов Nr. Deconectări Nº Vias Anz. Unterbrechungen	EURO EURO EURO EURO EURO EURO	Pack Cond. Уп-ка Ambalaj Caja Verp.
34.05.00	3/4"	S1xRBM	-	10
35.05.00	3/4"	S2xRBM	-	10
36.05.00	3/4"	S3xRBM	-	10
34.06.00	1"	S1xRBM	-	10
35.06.00	1"	S2xRBM	-	10
36.06.00	1"	S3xRBM	-	10
35.07.00	1"1/4	S2xRBM	-	10
36.07.00	1"1/4	S3xRBM	-	10

Standard RBM thread W24.5x19F junctions side

Module for female g1/2" junctions coplanar single manifold.
Module pour collecteur simple coplanaire dérivations femelle g1/2"
Модуль для компланарных коллекторов соединения наружные G 1/2"
Modul pentru colector simplu pe acelaşi plan derivaţii de tip mamă g1/2"
Colector simple con conexiones principales Macho-Hembra, conexiones derivaciones Hembra G1/2"
Modul für einfachen Parallelaufstecksammler Verzweigungen G1/2"

Code Code Артикул Cod Código Code	Body size Dimension corps Размер корпуса Dimensiune corp Medida Cuerpo Gehäuseabmessung	N. Ways Nb points de décrochage К-во отводов Nr. Deconectări Nº Vias Anz. Unterbrechungen	EURO EURO EURO EURO EURO EURO	Pack Cond. Уп-ка Ambalaj Caja Verp.
35.05.40	3/4"	S2x1/2"F	-	10
36.05.40	3/4"	S3x1/2"F	-	10
35.06.40	1"	S2x1/2"F	-	10
36.06.40	1"	S3x1/2"F	-	10

Junctions side thread FG1/2"

Use fittings with Standard RBM thread (see page 10.00) for the pipe connections.

Please use brackets cod. 129.0X.00 for fixing in plastic boxes or brackets cod. 899.00.00 for fixing in metal boxes.

016

63

Manifold, single, produced from casting, with in-line connections and unilateral junctions.

Nickel plated brass body.
Junction connections, centre distance 37 mm threaded M standard RBM
for copper, polyethylene and multilayer pipe fittings.
Threaded in-line connections FF UNI-EN-ISO 228.

- Max temperature 110°C
- Max operating pressure 1000 kPa

■ Technical drawing, page 11.17

Monoblock single manifold
Collecteur monobloc simple
Коллектор Monoblock
Colector Monobloc simplu
Colector simple con conexiones principales Hembra-Hembra, conexiones derivaciones Standard RBM
Block einfacher Sammler

Code Code Артикул Cod Código Code	Body size Dimension corps Размер корпуса Dimensiune corp Medida Cuerpo Gehäuseabmessung	N. Ways Nb points de décrochage К-во отводов Nr. Deconectări Nº Vias Anz. Unterbrechungen	EURO EURO EURO EURO EURO EURO	Pack Cond. Уп-ка Ambalaj Caja Verp.
63.05.00	3/4"	4	-	3
63.05.20	3/4"	5	-	3
64.05.00	3/4"	6	-	3
64.05.20	3/4"	7	-	3
65.05.00	3/4"	8	-	3
63.06.00	1"	4	-	3
63.06.20	1"	5	-	3
64.06.00	1"	6	-	3
64.06.20	1"	7	-	3
65.06.00	1"	8	-	3
66.06.00	1"	10	-	3

Standard RBM thread W24.5x19F junctions side

Use fittings with Standard RBM thread (see page 10.00) for the pipe connections.

Please use brackets cod. 129.0X.00 for fixing in plastic boxes or brackets cod. 899.00.00 for fixing in metal boxes.

016

59

Coplanar unilateral manifold, single, produced from casting, with in-line connections and unilateral junctions.

Nickel plated brass body.
Junction connections, centre distance 37 mm threaded M standard RBM for copper, polyethylene and multi-layer pipe fittings.
Threaded in-line connections FF UNI-EN-ISO 228, centre distance 50 mm.

- Max temperature 110°C
- Max operating pressure 1000 kPa

■ Technical drawing, page 11.17

Monoblock coplanar unilateral manifold
Collecteur monobloc coplanaire unilatéral
Односторонний компланарный коллектор "Monoblock"
Colector Monobloc pe acelaşi plan monolateral
Colector coplanar monolateral con conexiones principales Hembra-Hembra, conexiones derivaciones Standard RBM
Block paralleler Sammler einseitig

Code Code Артикул Cod Código Code	Body size Dimension corps Размер корпуса Dimensiune corp Medida Cuerpo Gehäuseabmessung	N. Ways Nb points de décrochage К-во отводов Nr. Deconectări Nº Vías Anz. Unterbrechungen	EURO EURO EURO EURO EURO EURO	Pack Cond. Уп-ка Ambalaj Caja Verp.
59.05.00	3/4"	4	-	1
60.05.00	3/4"	6	-	1
61.05.00	3/4"	8	-	1
62.05.00	3/4"	10	-	1
59.06.00	1"	4	-	1
60.06.00	1"	6	-	1
61.06.00	1"	8	-	1
62.06.00	1"	10	-	1

Standard RBM thread W24.5x19F junction side

Use fittings with Standard RBM thread (see page 10.00) for the pipe connections.

Please use brackets cod. 128.0X.00 for fixing in plastic boxes.

017

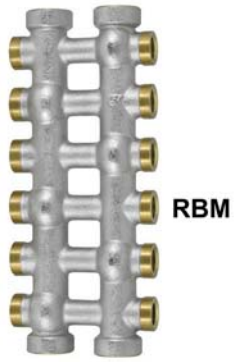

52

Coplanar double-sided manifold, produced from casting, with in-line connections and two-sided junctions.

Nickel plated brass body
Junction connections, centre distance 37 mm threaded M standard RBM for copper, polyethylene and multi-layer pipe fittings.
In-line connections, threaded FF UNI-EN-ISO 228.
Connections centre distance 50mm (manifold 3/4")
Connections centre distance 55mm (manifold 1")

- Max temperature 110°C
- Max operating pressure 1000 kPa

■ Technical drawing, page 11.17

Monoblock coplanar double-sided manifold
Collecteur monobloc coplanaire bilatéral
Двухсторонний компланарный коллектор "Monoblock"
Colector Monobloc pe acelaşi plan bilateral
Colector coplanar bilateral con conexiones principales Hembra-Hembra, conexiones derivaciones Standard RBM
Block paralleler Sammler beidseitig

Code Code Артикул Cod Código Code	Body size Dimension corps Размер корпуса Dimensiune corp Medida Cuerpo Gehäuseabmessung	N. Ways Nb points de décrochage К-во отводов Nr. Deconectări Nº Vías Anz. Unterbrechungen	EURO EURO EURO EURO EURO EURO	Pack Cond. Уп-ка Ambalaj Caja Verp.
52.05.20	3/4"	2+2	-	1
52.05.00	3/4"	4+4	-	1
53.05.00	3/4"	6+6	-	1
54.05.00	3/4"	8+8	-	1
55.05.00	3/4"	10+10	-	1
52.06.20	1"	2+2	-	1
52.06.00	1"	4+4	-	1
53.06.00	1"	6+6	-	1
54.06.00	1"	8+8	-	1
55.06.00	1"	10+10	-	1

Standard RBM thread W24.5x19F junction side

Use fittings with Standard RBM thread (see page 10.00) for the pipe connections.

Please use brackets cod. 128.0X.00 for fixing in plastic boxes.

017

433

Coplanar manifold, produced from casting, composed of a manifold with in-line connections and double-sided junctions with integrated 4-way motorized zone valve NC with adjustable bypass.

Nickel plated brass body
Ethylene-propylene rod seals
Obturator seal in NBR
Silicon steel springs
ABS cap for manual opening
Junction connections, centre distance 37 mm threaded M standard RBM for copper, polyethylene and multi-layer pipe fittings.
In-line threaded connections FF UNI-EN-ISO 228
Connections centre distance 50mm (manifold 3/4")
Connections centre distance 55mm (manifold 1")

- Max temperature 5...95 °C
- Max operating pressure 1000 kPa
- Max differential pressure 100 KPa

■ Technical drawing, page 11.18

Mono-Zona Monoblock manifold
Collecteur Monobloc Mono-Zone
Коллектор Monoblock Mono-Zona
Colector Monobloc Mono-zonă
Colector coplanar bilateral con conexiones principales Hembra-Hembra, conexiones derivaciones Standard RBM, con válvula de zona a pistón con by-pass regulable, motorizable
Block Sammler einzonig

Code Code Артикул Cod Código Code	Body size Dimension corps Размер корпуса Dimensiune corp Medida Cuerpo Gehäuseabmessung	N. Ways Nb points de décrochage К-во отводов Nr. Deconectări Nº Vías Anz. Unterbrechungen	EURO EURO EURO EURO EURO EURO	Pack Cond. Уп-ка Ambalaj Caja Verp.
433.05.00	3/4"	4+4	-	1
434.05.00	3/4"	6+6	-	1
435.05.00	3/4"	8+8	-	1
433.06.00	1"	4+4	-	1
434.06.00	1"	6+6	-	1
435.06.00	1"	8+8	-	1

Standard RBM thread W24.5x19F junction side

Replaceable screw unit.
Cod. 2440.013 See spare parts pricelist.

Use fittings with Standard RBM thread (see page 10.00) for the pipe connections.

Please use brackets cod. 128.0X.00 for fixing in plastic boxes.

017

100% MADE IN ITALY

ACCESSORIES FOR MONOBLOCK MANIFOLDS - RBM STANDARD CONNECTION JUNCTIONS

1150

Thermal insulation for RBM single Monoblock manifold made up from expanded polyethylene half-bearings with external antiscratch coating.

Complete with clips to fix half-bearings.

- Fire behaviour class I
- Density 33 kg/m3
- Max operating temperature -40 +90 °C

041

Single Monoblock manifold thermal shell
Coque isolante collecteur Monobloc simple
Теплоизоляционный кожух для коллекторов "Monoblock"
Carcasă termică colector Monobloc simplă
Aislante térmico para colector simple
Wärmeschale Block einfacher Sammler

Code Code Артикул Cod Código Code	Body size Dimension corps Размер корпуса Dimensiune corp Medida Cuerpo Gehäuseabmessung	N. Ways Nb points de décrochage К-во отводов Nr. Deconectări Nº Vías Anz. Unterbrechungen	EURO EURO EURO EURO EURO EURO	Pack Cond. Уп-ка Ambalaj Caja Verp.
1150.05.00	3/4″	2	-	5
1150.05.10	3/4″	3	-	5
1150.05.20	3/4″	4	-	5
1150.05.30	3/4″	5	-	5
1150.05.40	3/4″	6	-	5
1150.05.50	3/4″	7	-	1
1150.05.60	3/4″	8	-	1
1150.06.00	1″	2	-	5
1150.06.10	1″	3	-	5
1150.06.20	1″	4	-	5
1150.06.30	1″	5	-	5
1150.06.40	1″	6	-	5
1150.06.50	1″	7	-	1
1150.06.60	1″	8	-	1
1150.06.80	1″	10	-	1

Thermic insulation suitable for manifolds with derivation connections 37 mm interaxis

866

Thermal insulation for RBM double-sided Monoblock manifold made up from expanded polyethylene half-bearings with external antiscratch coating.

Complete with clips to fix half-bearings.

- Fire behaviour class I
- Density 33 kg/m3
- Max operating temperature -40 +90 °C

041

Double-sided Monoblock manifold thermal shell
Coque isolante collecteur Monobloc bilatéral
Теплоизоляционный кожух для двухсторонних коллекторов Monoblock
Carcasă termică colector Monobloc bilaterală
Aislante térmico para colector coplanar bilateral
Wärmeschale Block Sammler beidseitig

Code Code Артикул Cod Código Code	Body size Dimension corps Размер корпуса Dimensiune corp Medida Cuerpo Gehäuseabmessung	N. Ways Nb points de décrochage К-во отводов Nr. Deconectări Nº Vías Anz. Unterbrechungen	EURO EURO EURO EURO EURO EURO	Pack Cond. Уп-ка Ambalaj Caja Verp.
866.06.30	1″	4+4	-	1
866.06.20	1″	6+6	-	1
866.06.00	1″	10+10	-	1

Can be cut along preformed lines to obtain the desired number of junctions

Thermic insulation suitable for manifolds with derivation connections 37 mm interaxis

041

895

Thermal insulation for RBM Mono-Zona Monoblock manifold made up from expanded polyethylene half-bearings with external antiscratch coating.

Complete with clips to fix half-bearings.

- Fire behaviour class I
- Density 33 kg/m3
- Max operating temperature -40 +90 °C

041

Single zone monoblock manifold thermal shell
Coque isolante collecteur Monobloc Mono-Zone
Теплоизоляционный кожух для коллекторов Monoblock Mono-Zona
Carcasă termică colector Monobloc Mono-Zonă
Aislante térmico para colector coplanar monolateral
Wärmeschale Block Sammler einzonig

Code Code Артикул Cod Código Code	Body size Dimension corps Размер корпуса Dimensiune corp Medida Cuerpo Gehäuseabmessung	N. Ways Nb points de décrochage К-во отводов Nr. Deconectări Nº Vías Anz. Unterbrechungen	EURO EURO EURO EURO EURO EURO	Pack Cond. Уп-ка Ambalaj Caja Verp.
895.06.20	1″	4+4	-	1
895.06.10	1″	6+6	-	1
895.06.00	1″	8+8	-	1

Thermic insulation suitable for manifolds with derivation connections 37 mm interaxis

100% MADE IN ITALY

100

Single manifold produced from casting, with in-line connections and one-way lateral junctions.

Nickel plated brass body
Junction connections centre distance 50mm for copper, polyethylene and multilayer pipe fittings, Euroconus M 3/4" thread.
Threaded in-line connections MF UNI-EN-ISO 228

- Max temperature 110°C
- Max operating pressure 1000 kPa

■ Technical drawing, page 11.17

- Module for modular single manifold
- *Module pour collecteur simple modulable*
- *Модуль для сборного коллектора*
- *Modul pentru colector simplu combinabil*
- *Colector simple con conexiones principales 1" Macho-Hembra, conexiones derivaciones G3/4" Euroconus*
- *Modul für kombinierbarer einfachen Sammler*

Code Code Артикул Cod Código Code	Dimension Dimension Размер Dimensiune Dimensiones Abmessung	N. Ways Nb points de décrochage К-во отводов Nr. Deconectări Nº Vías Anz. Unterbrechungen	EURO/pz EURO/pz EURO/pz EURO/pz EURO/pz EURO/pz	Pack Cond. Уп-ка Ambalaj Caja Verp.
100.06.50	1"	S2x3/4"	-	10
101.06.50	1"	S3x3/4"	-	8
102.06.50	1"	S4x3/4"	-	3

EUROCONUS thread G3/4" UNI-EN-ISO 228

Use fittings with Euroconus G3/4" thread (see page 10.07) for pipe connection.

Use brackets cod. 219.0X.00 for metal case fastening.

016

219

Pair of steel brackets for fixing manifolds.

- Centre distance 220 mm

- Pair of steel brackets for fixing manifolds
- *Paire d'étrier en acier pour fixation collecteurs*
- *Пара стальных хомутов для крепления коллекторов*
- *Pereche de bride din oțel pentru fixarea colectoarelor*
- *Par de soportes para colectores simples, en acero*
- *Bügelpaar aus Eisen zur Befestigung der Sammler*

Code Code Артикул Cod Código Code	Size Taille Размер Dimensiune Medida Abmessung	EURO/pz EURO/pz EURO/pz EURO/pz EURO/pz EURO/pz	Pack Cond. Уп-ка Ambalaj Caja Verp.
219.06.00	1"	-	1
219.07.00	1"1/4	-	1

293

Module for modular single manifold, centre distance 50mm flat seat G 1/2"

Nickel plated brass body
Junction connections, M G 1/2" flat seat for copper, polyethylene and multilayer pipe fittings.
Centre distance 50 mm

- Max temperature 110°C
- Max operating pressure 1000 kPa

■ Technical drawing, page 11.17

Module for modular single manifold, flat seat (centre distance 50mm) m g 1/2"

Module pour collecteur simple modulable siège plat (entraxe 50 mm) m g 1/2"

Модуль для сборного коллектора плоское седло (межос. раст.50 мм), резьба нар. 1/2"

Modul pentru colector simplu combinabil cu locaș plat (distanța interaxială 50 mm) m g 1/2"

Colector simple con conexiones principales Macho-Macho, conexiones derivaciones Macho G1/2"

Modul für einfachen kombinierbaren Sammler flacher Sitz (Weite 50 mm) m g 1/2"

Code Code Артикул Cod Código Code	Size Taille Размер Dimensiune Medida Abmessung	N. Ways Nb points de décrochage К-во отводов Nr. Deconectări Nº Vías Anz. Unterbrechungen	EURO EURO EURO EURO EURO EURO	Pack Cond. Уп-ка Ambalaj Caja Verp.
293.05.00	3/4"	S3	-	10
294.05.00	3/4"	S4	-	10
295.05.00	3/4"	S5	-	8
296.05.00	3/4"	S6	-	5
297.05.00	3/4"	S7	-	5
298.05.00	3/4"	S8	-	5

Junctions side thread M G 1/2" (flat seat)

jet-line ACS

Use fittings with G1/2" thread, flat seat (see page 10.13) for the pipe connection.

134

Module for modular single manifold, centre distance 37mm (3/4") 50mm (1") tapered seat G 1/2"

Nickel plated brass body
Junction connections, M G 1/2" tapered seat for copper, polyethylene and multilayer pipe fittings.
Centre distance 37mm (3/4") - 50mm (1")

- Max temperature 110°C
- Max operating pressure 1000 kPa

■ Technical drawing, page 11.17

Module for modular single manifold, tapered seat (centre distance 37 mm) m g 1/2"

*Module pour collecteur simple modulable siège conique (entraxe 37 mm - *50mm) m g 1/2"*

*Модуль для простого сборного коллектора коническое седло (межос. раст.37мм-*50мм) нар. резьба 1/2"*

*Modul pentru colector simplu combinabil cu locaș conic (distanța interaxială 37 mm - *50mm) m g 1/2"*

Colector simple con conexiones principales Macho-Hembra, conexiones derivaciones Macho G1/2"

Modul für einfachen kombinierbaren Sammler flacher Sitz (Weite 37 mm) m g 1/2"

Code Code Артикул Cod Código Code	Size Taille Размер Dimensiune Medida Abmessung	N. Ways Nb points de décrochage К-во отводов Nr. Deconectări Nº Vías Anz. Unterbrechungen	EURO EURO EURO EURO EURO EURO	Pack Cond. Уп-ка Ambalaj Caja Verp.
134.05.50	3/4"	S2	-	10
135.05.50	3/4"	S3	-	10
150.05.50	3/4"	S4	-	10
426.06.00	1"	S2 *	-	10
427.06.00	1"	S3 *	-	10
428.06.00	1"	S4 *	-	10

Junctions side thread M G 1/2" (flat seat)

Use fittings with G1/2" thread, tapered seat (see page 10.13) for the pipe connection.

Please use brackets cod. 129.0X.00 for fixing in plastic boxes or brackets cod. 899.00.00 for fixing in metal boxes.

jet-line ACS

100% MADE IN ITALY

967

Manifold which can be used for distribution in sanitary systems.
Main connections complete with shut-off valves.
With inspection box complete with removable protective cover for plastering works.
Recessed assembly.

Nickel plated brass manifold body
Ethylene propylene elastomer seals
Shockproof ABS cap, ring nut and box
Side distribution connections,
centre distance 37 mm threaded M standard RBM for copper, polyethylene and multilayer pipe fittings
Main connections centre distance 50mm threaded G3/4" Euroconus for copper, polyethylene and multilayer pipe.

- Max temperature 95 °C
- Max operating pressure 1000 kPa

■ Technical drawing, page 11.18

Monoblock-Sanitario M.S. manifold adjustment with butterfly handwheel box with outside knob on cover

Collecteur Monoblock-Sanitario M.S. réglage par volant papillon coffret avec bouton extérieur sur le couvercle

Коллектор Monoblock-Sanitario M.S., регулировка ручкой "бабочка", монтажный шкаф с ручкой

Colector Monobloc-Sanitar M.S. reglare cu ajutorul unui robinet tip fluture casetă cu buton bombat exterior poziționat pe capac

Colector Monoblock-Sanitario para instalaciones sanitarias, con 3 salidas para ACS + 5 salidas para agua fría, con volante a mariposa, con caja en plástico con mandos externos, conexiones principales Euroconus, conexiones derivaciones Standard RBM

Sammler Block-Brauchwasser M.S. Einstellung mit Flügelrad Kasten mit externem Knauf auf dem Deckel

Code Code Артикул Cod Código Code	N. Ways Nb points de décrochage К-во отводов Nr. Deconectări Nº Vías Anz. Unterbrechungen	EURO EURO EURO EURO EURO EURO	Pack Cond. Уп-ка Ambalaj Caja Verp.
967.00.00	5+3	-	1

Monoblock-Sanitario M.S. manifold screwdriver adjustment box without knob

Collecteur Monoblock-Sanitario M.S. réglage par tournevis coffret sans bouton

Коллектор Monoblock-Sanitario M.S., регулировка отверткой, монтажный шкаф без ручки

Colector Monobloc-Sanitar M.S. reglare cu ajutorul șurubelniței casetă fără buton bombat

Colector Monoblock-Sanitario para instalaciones sanitarias, con 3 salidas para ACS + 5 salidas para agua fría, con volante a destornillador, con caja en plástico sin mandos externos, conexiones principales Euroconus, conexiones derivaciones Standard RBM

Sammler Block-Brauchwasser M.S. Einstellung Schraubendrehe Kasten ohne Knauf

Code Code Артикул Cod Código Code	N. Ways Nb points de décrochage К-во отводов Nr. Deconectări Nº Vías Anz. Unterbrechungen	EURO EURO EURO EURO EURO EURO	Pack Cond. Уп-ка Ambalaj Caja Verp.
967.00.10	5+3	-	1

Monoblock-Sanitario M.S. manifold adjustment with butterfly handwheel box with outside knob on bottom

Collecteur Monoblock-Sanitario M.S. réglage par volant papillon coffret avec bouton extérieur sur le fond

Коллектор Monoblock-Sanitario M.S., регулировка ручкой "бабочка", монтажный шкаф с ручкой на дне

Colector Monobloc-Sanitar M.S. reglare cu ajutorul unui robinet tip fluture casetă cu buton bombat exterior poziționat pe fund

Colector Monoblock-Sanitario para instalaciones sanitarias, con 5 salidas para agua fría + 3 salidas para ACS, con volante a mariposa, con caja en plástico con mandos externos, conexiones principales Euroconus, conexiones derivaciones Standard RBM

Sammler Block-Brauchwasser M.S. Einstellung mit Flügelrad Kasten mit externem Knauf am Boden

Code Code Артикул Cod Código Code	N. Ways Nb points de décrochage К-во отводов Nr. Deconectări Nº Vías Anz. Unterbrechungen	EURO EURO EURO EURO EURO EURO	Pack Cond. Уп-ка Ambalaj Caja Verp.
967.00.20	5+3	-	1

RBM standard thread on junction connection side
Euroconus thread on main connection side

Replaceable screw unit. See spare parts pricelist.

Use fittings with Euroconus G3/4" thread (see page 10.07) for the pipe side main connections.

Use fittings with Standard RBM thread (see page 10.00) for the junctions side pipe connections.

Patent nr 261918

903

Manifold which can be used for distribution in sanitary systems.
Main connections complete with shut-off valves.
With inspection box complete with removable protective cover for plastering works.
Recessed assembly.

Nickel plated brass manifold body
Ethylene propylene elastomer seals
Shockproof ABS cap, ring nut and box
Side distribution connections, centre distance 37 mm threaded M standard RBM for copper, polyethylene and multilayer pipe fittings
Main connections centre distance 50mm threaded G3/4" Euroconus for copper, polyethylene and multilayer pipe.

- Max temperature 95 °C
- Max operating pressure 1000 kPa

■ Technical drawing, page 11.18

Monoblock-Sanitario M.S. manifold adjustment with butterfly hand-wheel box with outside knob on cover

Collecteur Monoblock-Sanitario M.S. réglage par volant papillon coffret avec bouton extérieur sur le couvercle

Коллектор Monoblock-Sanitario M.S., регулировка ручкой "бабочка", монтажный шкаф с ручкой

Colector Monobloc-Sanitar M.S. reglare cu ajutorul unui robinet tip fluture casetă cu buton bombat exterior poziționat pe capac

Colector Monoblock-Sanitario para instalaciones sanitarias, con 4 salidas para ACS + 6 salidas para agua fría, con volante a mariposa, con caja en plástico con mandos externos, conexiones principales Euroconus, conexiones derivaciones Standard RBM

Sammler Block-Brauchwasser M.S. Einstellung mit Flügelrad Kasten mit externem Knauf auf dem Deckel

Code Code Артикул Cod Código Code	N. Ways Nb points de décrochage К-во отводов Nr. Deconectări Nº Vías Anz. Unterbrechungen	EURO EURO EURO EURO EURO EURO	Pack Cond. Уп-ка Ambalaj Caja Verp.
903.00.50	6+4	-	1

Monoblock-Sanitario M.S. manifold screwdriver adjustment box without knob

Collecteur Monoblock-Sanitario M.S. réglage par tournevis coffret sans bouton

Коллектор Monoblock-Sanitario M.S., регулировка отверткой, монтажный шкаф без ручки

Colector Monobloc-Sanitar M.S. reglare cu ajutorul șurubelniței casetă fără buton bombat

Colector Monoblock-Sanitario para instalaciones sanitarias, con 4 salidas para ACS + 6 salidas para agua fría, con volante a destornillador, con caja en plástico sin mandos externos, conexiones principales Euroconus, conexiones derivaciones Standard RBM

Sammler Block-Brauchwasser M.S. Einstellung Schraubendrehe Kasten ohne Knauf

Code Code Артикул Cod Código Code	N. Ways Nb points de décrochage К-во отводов Nr. Deconectări Nº Vías Anz. Unterbrechungen	EURO EURO EURO EURO EURO EURO	Pack Cond. Уп-ка Ambalaj Caja Verp.
903.00.60	6+4	-	1

Monoblock-Sanitario M.S. manifold adjustment with butterfly hand-wheel box with outside knob on bottom

Collecteur Monoblock-Sanitario M.S. réglage par volant papillon coffret avec bouton extérieur sur le fond

Коллектор Monoblock-Sanitario M.S., регулировка ручкой "бабочка", монтажный шкаф с ручкой

Colector Monobloc-Sanitar M.S. reglare cu ajutorul unui robinet tip fluture casetă cu buton bombat exterior poziționat pe fund

Colector Monoblock-Sanitario para instalaciones sanitarias, con 6 salidas para agua fría + 4 salidas para ACS, con volante a mariposa, con caja en plástico con mandos externos, conexiones principales Euroconus, conexiones derivaciones Standard RBM

Sammler Block-Brauchwasser M.S. Einstellung mit Flügelrad Kasten mit externem Knauf am Boden

Code Code Артикул Cod Código Code	N. Ways Nb points de décrochage К-во отводов Nr. Deconectări Nº Vías Anz. Unterbrechungen	EURO EURO EURO EURO EURO EURO	Pack Cond. Уп-ка Ambalaj Caja Verp.
903.00.70	6+4	-	1

RBM standard thread on junction connection side
Euroconus thread on main connection side

Replaceable screw unit. See spare parts pricelist.

Use fittings with Euroconus G3/4" thread (see page 10.07) for the pipe side main connections.

Use fittings with Standard RBM thread (see page 10.00) for the junctions side pipe connections.

Patent nr 261918

ACS

100% MADE IN ITALY

1143

Extension kit for Monoblock-Sanitario M.S. manifold box.

Kit composed of:
Extended threaded knobs
Extended cover fixing screw
Additional extensions for adjustments
Extensions fixing screws

- Max extension 50 mm

Extension kit for Monoblock-Sanitario M.S. manifold box

Kit prolongateur pour coffret collecteur Monoblock-Sanitario M.S.

Набор удлинителей для коллектора Monoblock-Sanitario M.S.

Kit de prelungitor pentru casetă colector Monobloc-Sanitar M.S.

Kit prolongación para colector Monoblock-Sanitario M.S.

Bausatz Verlängerung für Kasten Sammler Block-Brauchwasser M.S.

Code Code Артикул Cod Código Code	EURO EURO EURO EURO EURO EURO	Pack Cond. Уп-ка Ambalaj Caja Verp.
1143.00.00	-	1

016A

2673

Thermal anti-condensation insulation made up from expanded polyethylene half-bearings with external antiscratch coating.

- Fire behaviour class1
- Density 33 kg/m3
- Max operating temperature -40 +90 °C

Anti-condensation thermal shell.

Coque isolante anti-condensation

Антиконденсационный термоизоляционный кожух

Carcasă termică anticondens

Aislante térmico anticondensación para colector coplanar bilateral de gran capacidad

Wärmeschale gegen Kondenswasser

Code Code Артикул Cod Código Code	Size Taille Размер Dimensiune Medida Abmessung	Model Modèle Модель Model Modelo Modell	EURO EURO EURO EURO EURO EURO	Pack Cond. Уп-ка Ambalaj Caja Verp.
2673.00.00	-	5+3	-	1
2674.00.00	-	6+4	-	1

171

Single modular manifold, produced from casting with in-line connections, used for distributions of sanitary circuits.

One-sided junctions complete with built-in micrometric shut off valves.

Nickel plated brass body
Seals in ethylene-propylene elastomer and nitrile elastomer.
Shockproof ABS handwheel.
Junction connections, centre distance 37 mm threaded M standard RBM for copper, polyethylene and multi-layer pipe fittings, or M G1/2" (depending on model).
In-line threaded connections MF UNI-EN-ISO 228

- Max temperature 95 °C
- Max operating pressure 1000 kPa

■ Technical drawing, page 11.18

RBM / G ½"

Modular manifold, Standard RBM connections
Collecteur modulable, branchements standard RBM
Сборный коллектор, резьба стандартная rbm
Colector combinabil, prinderi Standard rbm
Colector con válvulas para instalaciones sanitarias, conexiones principales Macho-Hembra, conexiones derivaciones Standard RBM
Kombinierbarer Sammler, Standardanschlüsse Rbm

Code Code Артикул Cod Código Code	Body size Dimension corps Размер корпуса Dimensiune corp Medida Cuerpo Gehäuseabmessung	N. Ways Nb points de décrochage К-во отводов Nr. Deconectări Nº Vías Anz. Unterbrechungen	EURO EURO EURO EURO EURO EURO	Pack Cond. Уп-ка Ambalaj Caja Verp.
171.05.00	3/4"	2	-	5
172.05.00	3/4"	3	-	5
1330.05.00	3/4"	4	-	5
171.06.00	1"	2	-	5
172.06.00	1"	3	-	5
1330.06.00	1"	4	-	5

Standard RBM thread W24.5x19F junction side

Modular manifold, connections G 1/2"
Collecteur modulable, branchements G 1/2"
Сборный коллектор, резьба 1/2"
Colector combinabil, prinderi G 1/2"
Colector con válvulas para instalaciones sanitarias, conexiones principales Macho-Hembra, conexiones derivaciones Macho G1/2",
Kombinierbarer Sammler, Anschlüsse G 1/2"

Code Code Артикул Cod Código Code	Body size Dimension corps Размер корпуса Dimensiune corp Medida Cuerpo Gehäuseabmessung	N. Ways Nb points de décrochage К-во отводов Nr. Deconectări Nº Vías Anz. Unterbrechungen	EURO EURO EURO EURO EURO EURO	Pack Cond. Уп-ка Ambalaj Caja Verp.
171.05.60	3/4"	2	-	5
172.05.60	3/4"	3	-	5
1330.05.60	3/4"	4	-	5
171.06.60	1"	2	-	5
172.06.60	1"	3	-	5
1330.06.60	1"	4	-	5

Thread M G 1/2" junctions side tapered seat

Use fittings with Standard RBM thread (see page 10.00) or with G 1/2" thread (see page 10.13) for the pipe connection, depending on the model.

O.R. seal manifold

1331

Manifold plastic containment and inspection box, complete with removable cover. Brackets for fixing manifold supplied separately.

Recessed assembly

- Box dimensions mm (LxHxP) = 314x280x90
- Cover dimensions mm (LxH) = 340x306

Sanitary manifold box
Coffret pour collecteurs sanitaires
Монтажный шкаф для санитарных коллекторов
Casetă pentru colectoare sanitare
Caja para colectores sanitarios, con soportes de fijación y tapa, en plástico
Kasten für Brauchwassersammler

Code Code Артикул Cod Código Code	EURO EURO EURO EURO EURO EURO	Pack Cond. Уп-ка Ambalaj Caja Verp.
1331.30.00	-	10

Can also be inserted in partition walls with 8 cm boxed structures, plastered on both sides. Paintable cover.

1942

Pair of plastic brackets to fix Single Modular manifolds in plastic boxes (for boxes code 1331.30.00).

Pair of plastic brackets
Jeu de deux étriers en plastique
Пара пластиковых хомутов
Pereche de bride din plastic
Par de soportes para caja de colectores sanitarios, en plástico
Bügelpaar aus Kunststoff

Code Code Артикул Cod Código Code	Size Taille Размер Dimensiune Medida Abmessung	EURO EURO EURO EURO EURO EURO	Pack Cond. Уп-ка Ambalaj Caja Verp.
1942.05.00	3/4"	-	1
1942.06.00	1"	-	1

100% MADE IN ITALY

181

Buried connection elbow for sanitary and heating systems.

Internal elbow in CW617, threaded M standard RBM (pipe side) and F 1/2" UNI-EN-ISO 228 (cock side). Shockproof PP container.

- Max temperature 90 °C
- Max operating pressure 1000 kPa

■ Technical drawing, page 11.18

Connection elbow for sanitary systems
Coude de branchement pour installations sanitaires
Соединительное колено для систем водоснабжения
Curbă de racordare pentru instalații sanitare
Codo simples para calefacción o distribución sanitaria desmontable
Anschlussbogen für Brauchwasseranlagen

Code Code Артикул Cod Código Code	Size Taille Размер Dimensiune Medida Abmessung	Figure Figure Рисунок Figura Figura Abbildung	EURO EURO EURO EURO EURO EURO	Pack Cond. Уп-ка Ambalaj Caja Verp.
181.00.20*	1/2"	1	-	1
181.00.30**	1/2"	2	-	1

*For flush wall mounting
**For flush tile mounting
Standard RBM thread (W24.5x19F) pipe side

Suitable for corrugated pipe outside ø 25 mm (pipe ø 16) and outside ø 30 mm (pipe ø 20).

022

185

Buried connection elbows combined for sanitary and heating systems. Can be coupled to single pipe valves and diverter valves with centre distance 37 mm.

Internal elbow in CW617, threaded M standard RBM (pipe side) and F 1/2" UNI-EN-ISO 228 (cock side). Shockproof PP container.

- Max temperature 90 °C
- Max operating pressure 1000 kPa

■ Technical drawing, page 11.19

Buried connection elbow for sanitary systems
Coude de branchement de tuyauterie pour installations sanitaires
Соединительное колено
Curbă de racordare poziționată în jgheab pentru instalații sanitare
Par de codos para calefacción o distribución sanitaria desmontable
Unterputz-Anschlussbogen für Brauchwasseranlagen

Code Code Артикул Cod Código Code	Size Taille Размер Dimensiune Medida Abmessung	EURO EURO EURO EURO EURO EURO	Pack Cond. Уп-ка Ambalaj Caja Verp.
185.00.20*	1/2"	-	4
185.00.00**	1/2"	-	1
185.00.10***	1/2"	-	1

*Double with brackets
**Single without brackets
***Double without brackets
Standard RBM thread (W24.5x19F) pipe side

Pair of separable elbows supplied complete with wall templates (code 185.00.20).

Suitable for corrugated pipe outside ø 25 mm (pipe ø 16).

022

186

Connection elbow for double outlet sanitary systems

Internal elbow in CW617 threaded F 1/2" UNI-EN-ISO 228 (cock side) and double connection threaded M standard RBM (pipe side).
Shockproof PP container.

- Max temperature 90 °C
- Max operating pressure 1000 kPa

■ Technical drawing, page 11.19

Connection elbow for double outlet sanitary systems
Coude de branchement pour installations sanitaires double sortie
Угловое настенное крепление с двойным выходом
Curbă de racordare pentru instalații sanitare cu dublă ieșire
Codo doble para calefacción o distribución sanitaria desmontable
Anschlussbogen für Brauchwasseranlagen mit doppeltem Ausgang

Code Code Артикул Cod Código Code	Size Taille Размер Dimensiune Medida Abmessung	EURO EURO EURO EURO EURO EURO	Pack Cond. Уп-ка Ambalaj Caja Verp.
186.00.00	1/2"	-	1

Standard RBM thread (W24.5x19F) pipe side

Suitable for corrugated pipe outside ø 25 mm (pipe ø 16).

022

182

Fig.1: Template for fixing elbows to wall. Suitable for fixing products code 181-185-186.

Fig.2: Multipurpose knob with threaded connection M 1/2" for:

- Elbow levelling
- Hydraulic closure for sealing test
- Plastering protection

Connection elbow accessories
Accessoires pour coude de branchement
Комплектующие для угловых настенных креплений
Accesorii pentru curba de racordare
Soporte y tapón para prueba hidráulica para codo simple y doble
Zubehör für Anschlussbogen

Code Code Артикул Cod Código Code	Size Taille Размер Dimensiune Medida Abmessung	Figure Figure Рисунок Figura Figura Abbildung	EURO EURO EURO EURO EURO EURO	Pack Cond. Уп-ка Ambalaj Caja Verp.
182.00.00	-	1	-	10
183.00.00	1/2"	2	-	20

022

248

Accessories for buried connection elbows. Extension for elbow connection combined to single pipe valves or diverter valves.

Nickel plated brass body.
Nitrile seals.
Threaded connection M 1/2" UNI-EN-ISO 228.

- Max temperature 90 °C
- Max operating pressure 1000 kPa

Connection elbow accessories
Accessoires pour coude de branchement
Комплектующие для угловых настенных креплений
Accesorii pentru curba de racordare
Tubo de cobre niquelado para codo simple y doble
Zubehör für Anschlussbogen

Code Code Артикул Cod Código Code	Size Taille Размер Dimensiune Medida Abmessung	Connections Raccords Резьба Prinderi Conexiones Anschlüsse	EURO EURO EURO EURO EURO EURO	Pack Cond. Уп-ка Ambalaj Caja Verp.
248.04.00	1/2"	Ø16 L = 80	-	20
248.04.20	1/2"	Ø16 L = 120	-	20
248.04.10	1/2"	Ø15 L = 180	-	20

26

Buried connection elbow accessories. 90° elbow to guide buried elbow feed hose.

PP body
Max pipe diameter 25 mm

- Max temperature 90 °C

Connection elbow accessories 90° elbow
Accessoires pour coudes de branchement coude à 90°
Комплектующие для угловых настенных креплений кондуктор 90°
Accesorii pentru curba de racordare curbare la 90
Curva 90º guía-tubo
Zubehör für Anschlussbögen Bogen zu 90°

Code Code Артикул Cod Código Code	EURO EURO EURO EURO EURO EURO	Pack Cond. Уп-ка Ambalaj Caja Verp.
26.00.00	-	15

100% MADE IN ITALY

95

Modular coplanar manifold, produced from casting, with in-line connections and two-sided junctions.

Nickel plated brass body
Junction connections, centre distance 55 mm threaded M W28x19F for copper pipe fittings.
In-line connections, centre distance 74 mm threaded MF UNI-EN-ISO 228, with rotary ring nut to assemble modules.

- Max temperature 110°C
- Max operating pressure 1000 kPa

■ Technical drawing, page 11.19

Double side manifold module
Module pour collecteur bilatéral
Модуль для двухсторонних коллекторов
Modul pentru colector bilateral
Colector coplanar bilateral de gran capacidad con conexiones principales Macho-Hembra, conexiones derivaciones Withworth
Modul für beiseitigen Sammler

Code Code Артикул Cod Código Code	Body size Dimension corps Размер корпуса Dimensiune corp Medida Cuerpo Gehäuseabmessung	N. Ways Nb points de décrochage К-во отводов Nr. Deconectări Nº Vías Anz. Unterbrechungen	EURO EURO EURO EURO EURO EURO	Pack Cond. Уп-ка Ambalaj Caja Verp.
95.08.00	1"1/2	2+2	-	1

Withworth thread W28x19F junction side

Suitable for circuits with large flow rates.

Use fittings with Withworth thread (see page. 11.19) or with G3/4 Euroconus thread (see page 10.07) if using specific reduction code 1390.05.00

017

805

Thermal anti-condensation insulation made up from expanded polyethylene half-bearings with external antiscratch coating.

- Fire behaviour class1
- Density 33 kg/m3
- Max operating temperature -40 +90 °C

Anti-condensation thermal shell.
Coque isolante anti-condensation
Антиконденсационный термоизоляционный кожух
Carcasă termică anticondens
Aislante térmico anticondensación para colector coplanar bilateral de gran capacidad
Wärmeschale gegen Kondenswasser

Code Code Артикул Cod Código Code	Size Taille Размер Dimensiune Medida Abmessung	Model Modèle Модель Model Modelo Modell	EURO EURO EURO EURO EURO EURO	Pack Cond. Уп-ка Ambalaj Caja Verp.
805.00.00	1"1/2	6+6	-	1

Can be cut along preformed lines to obtain the desired number of junctions.

Half-bearings suitable to insulate up to three manifolds code 95.08.00, in series or separate.

041

1390

Euroconus reduction W28x19F x G3/4", for double-sided manifold.

Wirthworth threaded manifold connection W28x19F F
Euroconus threaded reduction connection G3/4" M

- Max temperature 110°C
- Max operating pressure 1000 kPa

Euroconus reduction W28x19F female x G3/4"
Réduction W28x19F femelle x G3/4" euroconus
Переходник W28xF19 резьба внутренняя и 3/4" euroconus
Reducție W28x19F tip mamă x G3/4" euroconus
Reducción Withworth Hembra W28x19F - Macho Euroconus 3/4"
Reduzierstück W28x19F Aufsteckung x G3/4" Euroconus

Code Code Артикул Cod Código Code	Size Taille Размер Dimensiune Medida Abmessung	EURO EURO EURO EURO EURO EURO	Pack Cond. Уп-ка Ambalaj Caja Verp.
1390.05.00	3/4"	-	10

041

116

Compression fitting for annealed copper pipe.

Brass nut and ogive.
Nitrile seals.
Withworth F threaded connection.

- Max operating pressure 95 °C
- Max operating pressure 1000 kPa

Fitting for copper pipe with metal ogive
Raccord pour tube cuivre avec ogive métallique
Фитинг для медных труб с металлической прокладкой
Racord pentru conductă din cupru cu ogivă metalică
Adaptador Withworth para tubo de cobre recocido
Anschluss für Kupferohr mit Metallkopf

Code Code Артикул Cod Código Code	Size Taille Размер Dimensiune Medida Abmessung	EURO EURO EURO EURO EURO EURO	Pack Cond. Уп-ка Ambalaj Caja Verp.
116.12.00	Ø12	-	10
116.14.00	Ø14	-	10
116.15.00	Ø15	-	10
116.16.00	Ø16	-	10
116.18.00	Ø18	-	10
116.22.00	Ø22	-	10

Withworth thread W 28x19F

040

W28x19F

173

Blind side cap for modular manifold ways.

Nickel plated brass body.
PTFE seal.
Threaded F Withworth connection.

- Max operating pressure 110 °C
- Max operating pressure 1000 kPa

Blind side cap
Bouchon latéral borgne
Глухая боковая заглушка
Buşon lateral orb
Tapón Hembra para conexión Withworth
Seitliche Blindkappe

Code Code Артикул Cod Código Code	Size Taille Размер Dimensiune Medida Abmessung	EURO EURO EURO EURO EURO EURO	Pack Cond. Уп-ка Ambalaj Caja Verp.
173.00.00		-	10

Withworth thread W 28x19F

040

B
A

170

Modular manifold connection nipple with steel pipe.

Nickel plated brass body.
Threaded connections MF UNI-EN-ISO 228.

- Max operating pressure 110 °C
- Max operating pressure 1000 kPa

Connection nipple
Mamelon de raccordement
Соединительный ниппель
Nipluri de racordare
Niple reducido Macho-Hembra rosca Gas
Verbindungsnippel

Code Code Артикул Cod Código Code	Size A Dimension A Размер A Dimensiunea A Medida A Abmessung A	Size B Dimension B Размер B Dimensiunea B Medida B Abmessung B	EURO EURO EURO EURO EURO EURO	Pack Cond. Уп-ка Ambalaj Caja Verp.
170.08.00	1" 1/4F	1" 1/2M	-	4

040

G 1"1/2

90

Blind head cap for modular manifolds.

Nickel plated brass body.
PTFE seal.
Threaded connection F UNI-EN-ISO 228.

- Max operating pressure 110 °C
- Max operating pressure 1000 kPa

Blind head cap
Bouchon de tête borgne
Глухая заглушка
Buşon de cap orb
Tapón Hembra conexión rosca Gas
Kappe mit Blindkopf

Code Code Артикул Cod Código Code	Size Taille Размер Dimensiune Medida Abmessung	EURO EURO EURO EURO EURO EURO	Pack Cond. Уп-ка Ambalaj Caja Verp.
90.08.00	1" 1/2	-	4

040

G 1/2"

G 1"1/2

91

Perforated head cap for modular manifolds.

Nickel plated brass body.
PTFE seal.
Connection to manifold F UNI-EN-ISO 228
Head connection F 1/2" UNI-EN-ISO 228.

- Max operating pressure 110 °C
- Max operating pressure 1000 kPa

Perforated head cap
Bouchon de tête percé
Заглушка с отверстием
Buşon de cap găurit
Reducción Hembra-Hembra rosca Gas
Kappe mit gelochtem Kopf

Code Code Артикул Cod Código Code	Size Taille Размер Dimensiune Medida Abmessung	EURO EURO EURO EURO EURO EURO	Pack Cond. Уп-ка Ambalaj Caja Verp.
91.08.00	1" 1/2	-	4

040

W28x19F

GAS

92

Head connection for copper or polyethylene fitting (only fitting code 116)

Nickel plated brass body.
PTFE seal.
Threaded connections F UNI-EN-ISO 228/M Withworth.

- Max operating pressure 110 °C
- Max operating pressure 1000 kPa

Head connection for copper or polyethylene fitting
Branchement de tête pour raccord cuivre ou polyéthylène
Переходник для присоединения фитинга для полиэтиленовых и медных труб
Prindere de cap pentru racord din cupru sau polietilenă
Racor Macho Withworth – Hembra rosca Gas
Kopfbefestigung für Kupfer- oder Polyethylenanschluss

Code Code Артикул Cod Código Code	Size Taille Размер Dimensiune Medida Abmessung	EURO EURO EURO EURO EURO EURO	Pack Cond. Уп-ка Ambalaj Caja Verp.
92.08.00	1" 1/2	-	4

Withworth thread W 28x19F

040

100% MADE IN ITALY

040

247

Transition fitting MM to connect zone valves to copper pipe (only for copper fitting code 116).

Nickel plated brass body.
Threaded connections
M UNI-EN-ISO 228 / M Withworth.

- Max operating pressure 110 °C
- Max operating pressure 1000 kPa

Lateral connection for copper or polyethylene fitting
Branchement latéral pour raccord cuivre ou polyéthylène
Боковой переходник для присоединения фитинга для полиэтиленовых и медных труб
Prindere laterală pentru racord din cupru sau polietilenă
Racor Macho Withworth – Macho rosca Gas
Seitenbefestigung für Kupfer- oder Polyethylenanschluss

Code Code Артикул Cod Código Code	Size Taille Размер Dimensiune Medida Abmessung	EURO EURO EURO EURO EURO EURO	Pack Cond. Уп-ка Ambalaj Caja Verp.
247.05.00	3/4"	-	4

Withworth thread W 28x19F

041

105

Straight regulation single shut-off valve for junction circuits from modular manifolds.

Nickel plated brass body.
Seals in ethylene-propylene elastomer and nitrile elastomer.
Shockproof ABS handwheel.
Rotary connection to manifold, threaded F standard RBM with seal.
Threaded M standard RBM connection for copper, polyethylene and multilayer pipe fittings.

- Max temperature 110°C
- Max operating pressure 1000 kPa

■ Technical drawing, page 11.19

Manual valve
Vanne manuelle
Ручной клапан
Supapă manuală
Válvula manual recta, niquelada, conexiones 3 piezas Macho–Macho Standard RBM
Handventil

Code Code Артикул Cod Código Code	Size Taille Размер Dimensiune Medida Abmessung	Figure Figure Рисунок Figura Figura Abbildung	EURO EURO EURO EURO EURO EURO	Pack Cond. Уп-ка Ambalaj Caja Verp.
105.00.00	RBM		-	10

RMB Standard Thread (W24,5x19F)

041

106

Straight regulation single shut-off lockshield valve for junction circuits from modular manifolds.

Nickel plated brass body.
Seals in ethylene-propylene elastomer and nitrile elastomer.
Shockproof ABS handwheel.
Rotary connection to manifold, threaded F standard RBM with seal.
Threaded M standard RBM connection for copper, polyethylene and multilayer pipe fittings.

- Max temperature 110°C
- Max operating pressure 1000 kPa

■ Technical drawing, page 11.19

Lockshield regulating valve
Détendeur de régulation
Запорно-регулировочный клапан
Acționator de reglare
Detentor recto, niquelado, conexiones 3 piezas Macho–Macho Standard RBM
Rücklaufverschraubung zur Einstellung

Code Code Артикул Cod Código Code	Size Taille Размер Dimensiune Medida Abmessung	Figure Figure Рисунок Figura Figura Abbildung	EURO EURO EURO EURO EURO EURO	Pack Cond. Уп-ка Ambalaj Caja Verp.
106.00.00	RBM		-	10

RMB Standard Thread (W24,5x19F)

041

556

Straight valve with thermostatic option for junction circuits from modular manifolds.

Nickel plated brass body.
Seals in ethylene-propylene elastomer and nitrile elastomer.
Shockproof ABS handwheel.
Rotary connection to manifold, threaded F standard RBM with seal.
Threaded M standard RBM connection for copper, polyethylene and multilayer pipe fittings.

- Max temperature 110°C
- Max operating pressure 1000 kPa

■ Technical drawing, page 11.19

Valve with thermostatic option
Robinet thermostatique
Терморегулирующий клапан
Supapă cu posibilitate de reglare termostatică
Válvula termostatizable recta, niquelada, conexiones 3 piezas Macho–Macho Standard RBM
Mit Thermostat ausrüstbares Ventil

Code Code Артикул Cod Código Code	Size Taille Размер Dimensiune Medida Abmessung	EURO EURO EURO EURO EURO EURO	Pack Cond. Уп-ка Ambalaj Caja Verp.
556.00.00	RBM	-	10

RMB Standard Thread (W24,5x19F)

041

Can be coupled to thermoelectric actuatorss RBM code 306.00.X2

100% MADE IN ITALY

108

Ball shut-off valve for junction circuits from modular manifolds.

Nickel plated brass body.
Seals in ethylene-propylene elastomer and nitrile elastomer.
Ball command with flat screw.
Rotary connection to manifold, threaded F standard RBM with seal.
Threaded M standard RBM connection for copper, polyethylene and multilayer pipe fittings.

- Max temperature 100 °C
- Max operating pressure 1000 kPa

■ Technical drawing, page 11.20

Ball shutoff valve
Vanne d'arrêt à bille
Отсекающий шаровый кран
Supapă de interceptare cu bilă
Válvula de intercepción a esfera, accionamiento mediante destornillador, conexiones Macho-Hembra Standard RBM
Kugelabsperrventil

Code Code Артикул Cod Código Code	Size Taille Размер Dimensiune Medida Abmessung	Figure Figure Рисунок Figura Figura Abbildung	EURO EURO EURO EURO EURO EURO	Pack Cond. Уп-ка Ambalaj Caja Verp.
108.00.00	RBM		-	15

RMB Standard Thread (W24,5x19F)

608

Brass compact manifold kit.

Each kit contains:
n° 1 multi-way manifold unit complete with micrometric flow-check valves with graduated handwheel;
n° 1 multi-way manifold unit complete with thermostatic valves with hand wheel;
n ° 1 pair of plastic brackets for fixing manifolds.

- Temperature range 0÷100 °C
- Max operating pressure 1000 kPa

Brass compact manifold kit
Kit collecteurs compacts en laiton
Комплект для компактных коллекторов из латуни
Kit colectoare compacte din alamă
Kit colectores compactos de latón
Bausatz Sammler kompakt aus Messing

Code Code Артикул Cod Código Code	Dimension Dimension Размер Dimensiune Dimensiones Abmessung	N. Ways Nb points de décrochage К-во отводов Nr. Deconectări Nº Vías Anz. Unterbrechungen	EURO/pz EURO/pz EURO/pz EURO/pz EURO/pz EURO/pz	Pack Cond. Уп-ка Ambalaj Caja Verp.
608.26.60	1″	Kit 2 vie	-	1
608.06.60	1″	Kit 3 vie	-	1
609.06.60	1″	Kit 4 vie	-	1
610.06.60	1″	Kit 5 vie	-	1
611.06.60	1″	Kit 6 vie	-	1
612.06.60	1″	Kit 7 vie	-	1
613.06.60	1″	Kit 8 vie	-	1
614.06.60	1″	Kit 9 vie	-	1
615.06.60	1″	Kit 10 vie	-	1
616.06.60	1″	Kit 11 vie	-	1
616.12.60	1″	Kit 12 vie	-	1
616.13.60	1″	Kit 13 vie	-	1

Interaxis connections through 50mm distribution - EUROCONUS G3/4" UNI-EN-ISO 228 threading

Manifolds kit can be inserted in walls constructed in 8 cm box, plastered.

Composition with adjustable lockshield valves with graduated handwheel. Loose packaged components.

Use fittings with Euroconus G3/4" thread (see page 10.07) for pipe connection.

100% MADE IN ITALY

ZONE VALVES

VANNES DE ZONE

ЗОННЫЕ КЛАПАНЫ

SUPAPE DE ZONĂ

VÁLVULAS DE ZONA

ZONENVENTIL

Zone valves

Accessories
for zone valves

Compact zone valves

012

112

2-way motorizable zone valve
Normally Closed.

Nickel plated brass body.
Obturator seal in NBR.
Rod seals in ethylene-propylene.
Silicon steel springs.
Anti-water hammer function.
Cap for manual opening in ABS.
Threaded in-line connections FF UNI-EN-ISO 228.

- Max temperature 5...95 °C
- Max operating pressure 1000 kPa
- Max differential pressure 100 KPa

■ Technical drawing, page 11.20

2-way motorizable zone valve
Vanne de zone motorisable à 2 voies
Зонный двухходовой клапан (управляется сервоприводом)
Supapă de zonă motorizabilă cu 2 canale
Válvula de zona 2 vías a pistón, normalmente cerrada, motorizable
Motorisierbares Zonenventil mit 2 Wege

Code Code Артикул Cod Código Code	Size Taille Размер Dimensiune Medida Abmessung	Model Modèle Модель Model Modelo Modell	EURO EURO EURO EURO EURO EURO	Pack Cond. Уп-ка Ambalaj Caja Verp.
112.04.70	1/2"	Zona 2	-	1
112.05.70	3/4"	Zona 2	-	1
112.06.70	1"	Zona 2	-	1

012

113

3-way motorizable zone valve
Normally Closed on direct way.

Nickel plated brass body.
Obturator seal in NBR.
Rod seals in ethylene-propylene.
Silicon steel springs.
Anti-water hammer function.
Cap for manual opening in ABS.
Threaded connections FF UNI-EN-ISO 228.

- Max temperature 5...95 °C
- Max operating pressure 1000 kPa
- Max differential pressure 100 KPa

■ Technical drawing, page 11.20

3-way motorizable zone valve
Vanne de zone motorisable à 3 voies
Зонный трехходовой клапан (управляется сервоприводом)
Supapă de zonă motorizabilă cu 3 canale
Válvula de zona 3 vías a pistón, normalmente cerrada, motorizable
Motorisierbares Zonenventil mit 3 Wege

Code Code Артикул Cod Código Code	Size Taille Размер Dimensiune Medida Abmessung	Model Modèle Модель Model Modelo Modell	EURO EURO EURO EURO EURO EURO	Pack Cond. Уп-ка Ambalaj Caja Verp.
113.04.70	1/2"	Zona 3	-	1
113.05.70	3/4"	Zona 3	-	1
113.06.70	1"	Zona 3	-	1

012

114

4-way motorizable zone valve
Normally Closed on direct way.
Can be coupled to Monoblock coplanar manifolds and complete with adjustable micrometric bypass.

Nickel plated brass body.
Obturator seal in NBR.
Rod seals in ethylene-propylene.
Silicon steel springs.
Anti-water hammer function.
Cap for manual opening in ABS.
Threaded in-line connections FF UNI-EN-ISO 228.

- Max temperature 5...95 °C
- Max operating pressure 1000 kPa
- Max differential pressure 100 KPa

■ Technical drawing, page 11.20

4-way motorizable zone valve
Vanne de zone motorisable à 4 voies
Зонный четырёхходовой клапан (управляется сервоприводом)
Supapă de zonă motorizabilă cu 4 canale
Válvula de zona 4 vías a pistón con by-pass regulable, normalmente cerrada, motorizable
Motorisierbares Zonenventil mit 4 Wege

Code Code Артикул Cod Código Code	Size Taille Размер Dimensiune Medida Abmessung	Model Modèle Модель Model Modelo Modell	EURO EURO EURO EURO EURO EURO	Pack Cond. Уп-ка Ambalaj Caja Verp.
114.05.70	3/4"	Zona 4	-	1
114.06.70	1"	Zona 4	-	1

With adjustable bypass for perfect balancing of the network even in case of stoppage of the fed zone.

Can also be installed on coplanar manifolds.

adjustable centre distance 50…55 mm.

012

114

4-way motorizable zone valve
Normally Closed on direct way.
Can be coupled to Monoblock coplanar manifolds and complete with adjustable micrometric bypass and extension.

Nickel plated brass body.
Obturator seal in NBR.
Rod seals in ethylene-propylene.
Silicon steel springs.
Anti-water hammer function.
Cap for manual opening in ABS.
Threaded in-line connections FF UNI-EN-ISO 228.

- Max temperature 5...95 °C
- Max operating pressure 1000 kPa
- Max differential pressure 100 KPa

■ Technical drawing, page 11.20

4-way motorizable zone valve
Vanne de zone motorisable à 4 voies
Зонный четырёхходовой клапан (управляется сервоприводом)
Supapă de zonă motorizabilă cu 4 canale
Válvula de zona 4 vías a pistón con by-pass regulable para colector entreejes 114÷119mm , normalmente cerrada, motorizable
Motorisierbares Zonenventil mit 4 Wege

Code Code Артикул Cod Código Code	Size Taille Размер Dimensiune Medida Abmessung	Model Modèle Модель Model Modelo Modell	EURO EURO EURO EURO EURO EURO	Pack Cond. Уп-ка Ambalaj Caja Verp.
114.05.20	3/4"	Zona 4	-	1
114.06.20	1"	Zona 4	-	1

With adjustable bypass for perfect balancing of the network even in case of stoppage of the fed zone.

Can also be installed on coplanar manifolds.

adjustable centre distance 114…119 mm.

373

Electromechanical On-Off actuator for zone valves, complete with built-in auxiliary microswitch with potential-free and live contact. Electric connection via internal terminal board.

Fireproof resin enclosure

- Power supply 24V AC or 230V AC
- Consumption 3 W
- Switch contacts capacity 6A 250 VAC
- Frequency 50 Hz
- Electric protection IP 42
- Operating temperature -5...60°C
- Triggering time 240 seconds

■ Technical drawing, page 11.20

Electromechanical actuator
Servocommande électromécanique
Электромеханический сервопривод
Servocomandă electromecanică
Servomotor electrotérmico para válvula de zona a pistón con microinterruptor auxiliar
Elektrothermische Servosteuerung

Code Code Артикул Cod Código Code	Power supply Alimentation Питание Alimentare Alimentación Versorgung	EURO EURO EURO EURO EURO EURO	Pack Cond. Уп-ка Ambalaj Caja Verp.
373.00.50	230V AC	-	1
373.00.60	24V AC	-	1

Version supplied with Auxiliary Microswitch

014

3-wire normally open command and built-in microswitch

2502

Thermo-electric On-Off actuator for zone valves.
Complete with ring nut clamping to valve body in electric power cable.

Shockproof ABS enclosure

- Power supply 24V AC or 230V AC
- Consumption 5 VA
- Frequency 50/60 Hz
- Electric protection IP 54
- Operating temperature 0...50°C
- Triggering time ~210 seconds (4.5 mm travel) power supply 230V
- Cable length 1 m
- Installation: in all positions

Thermo-electric actuator
Servocommande électrothermique
Электротермический сервопривод
Servocomandă electrotermică
Cabezal electrotérmico normalmente abierto para válvula de zona a pistón
Elektrothermische Servosteuerung

Code Code Артикул Cod Código Code	Power supply Alimentation Питание Alimentare Alimentación Versorgung	EURO EURO EURO EURO EURO EURO	Pack Cond. Уп-ка Ambalaj Caja Verp.
2502.00.12	230V AC	-	1
2502.00.22	24V AC	-	1

Version without Auxiliary Microswitch (2 wires)

Thermo-electric actuator with auxiliary microswitch
Servocommande électrothermique avec microrupteur auxiliaire
Электротермический сервопривод со вспомогательным микропереключателем
Servocomandă electrotermică cu microîntrerupător auxiliar
Cabezal electrotérmico normalmente abierto con microinterruptor para válvula de zona a pistón
Elektrothermische Servosteuerung mit Hilfmikroschalter.

Code Code Артикул Cod Código Code	Power supply Alimentation Питание Alimentare Alimentación Versorgung	EURO EURO EURO EURO EURO EURO	Pack Cond. Уп-ка Ambalaj Caja Verp.
2502.00.32	230V AC	-	1
2502.00.42	24V AC	-	1

Version supplied with Auxiliary Microswitch (4 wires)

014

2-wire normally open command and built-in microswitch with bayonet connection and 1 m cable (supplied version)

Installation in all positions

2503

Valve auxiliary limit switch.

Supplied with thermo-electric actuator RBM code 2502.00.32 and 2502.00.42
Closed contact with actuator powered.

Auxiliary switch for thermo-electric actuator
Interrupteur auxiliaire pour servocommande électrothermique
Вспомогательный выключатель для электротермического сервопривода
Întrerupător auxiliar pentru servocomandă electrotermică
Microinterruptor auxiliar para cabezal electrotérmico
Hilfsschalter elektrothermische Servosteuerung

Code Code Артикул Cod Código Code	Model Modèle Модель Model Modelo Modell	EURO EURO EURO EURO EURO EURO	Pack Cond. Уп-ка Ambalaj Caja Verp.
2503.00.02	-	-	1

014

Auxiliary switch to be combined to servocontrol series 2502.00.X2

100% MADE IN ITALY

360

Thermo-electric On-Off actuator for zone valves.
Electric connection via internal terminal board.

Shockproof ABS enclosure

- Power supply 24V AC or 230V AC
- Consumption 5 VA
- Frequency 50/60 Hz
- Electric protection IP 31
- Max ambient temperature 5...50°C
- Triggering time ~120 seconds

■ Technical drawing, page 11.20

Thermo-electric actuator
Servocommande électrothermique
Электротермический сервопривод
Servocomandă electrotermică
Servomotor electrotérmico normalmente abierto para válvula de zona a pistón
Elektrothermische Servosteuerung

Code Code Артикул Cod Código Code	Power supply Alimentation Питание Alimentare Alimentación Versorgung	EURO EURO EURO EURO EURO EURO	Pack Cond. Уп-ка Ambalaj Caja Verp.
360.00.10	230V AC	-	1
360.00.20	24V AC	-	1

Version without Auxiliary Microswitch

Thermo-electric actuator with auxiliary microswitch
Servocommande électrothermique avec microrupteur auxiliaire
Электротермический сервопривод со вспомогательным микропереключателем
Servocomandă electrotermică cu microîntrerupător auxiliar
Servomotor electrotérmico normalmente abierto con microinterruptor para válvula de zona a pistón
elektrothermische Servosteuerung mit Hilfmikroschalter

Code Code Артикул Cod Código Code	Power supply Alimentation Питание Alimentare Alimentación Versorgung	EURO EURO EURO EURO EURO EURO	Pack Cond. Уп-ка Ambalaj Caja Verp.
360.00.30	230V AC	-	1
360.00.40	24V AC	-	1

Version supplied with Auxiliary Microswitch

014

2-wire normally open command. 3-year product warranty when used correctly

313

Valve auxiliary limit switch.

Supplied with thermo-electric actuators code 360.00.30 and 360.00.40

Closed contact with actuators powered.

- Contacts capacity 2(0,2)A 250 V AC

Auxiliary switch for thermo-electric actuators
Interrupteur auxiliaire pour servocommande électrothermique
Вспомогательный микропереключатель для электротермического сервопривода
Întrerupător auxiliar pentru servocomandă electrotermică
Microinterruptor auxiliar para servomotor electrotérmico
Hilfsschalter elektrothermische Servosteuerung

Code Code Артикул Cod Código Code	Model Modèle Модель Model Modelo Modell	EURO EURO EURO EURO EURO EURO	Pack Cond. Уп-ка Ambalaj Caja Verp.
313.00.02	D 41	-	1

014

Auxiliary switch to be combined to servocontrol series 360.00.X0

100% MADE IN ITALY

814

2-way compact, motorizable zone valve.

Normally Closed with mounted servomotor , not powered.

Nickel plated brass body.
Poppet valve and seal in EPDM.
Rod seals in ethylene-propylene.
Stainless steel springs.
Handwheel for manual opening in ABS.
Threaded connections FF UNI-EN-ISO 228.

- Max temperature 5...95 °C
- Max operating pressure 1000 kPa
- Max differential pressure 100 KPa

■ Technical drawing, page 11.20

2 way compact, motorizable zone valve - filling unit inlets

Vanne de zone compacte motorisable à 2 voies - raccords à tubulure

Компактный двухходовой зонный клапан (управляется сервоприводом) с патрубками

Supapă de zonă compactă cu acționare cu motor cu 2 căi - prinderi cu racord

Válvula de zona compacta motorizable de 2 vías - conexiones de boca de llenado

Motorisierbares Zonenventil kompakt mit 2 Wege - Stutzenanschluss

Code Code Артикул Cod Código Code	Size Taille Размер Dimensiune Medida Abmessung	Model Modèle Модель Model Modelo Modell	EURO EURO EURO EURO EURO EURO	Pack Cond. Уп-ка Ambalaj Caja Verp.
814.05.20	3/4"	Zona 2C	-	1
814.06.20	1"	Zona 2C	-	1

New

Prearranged for thermo-electric actuators code 2944.00. X2

013

813

3-way compact, motorizable zone valve.

Normally Closed on direct route with mounted servomotor, not powered.

Nickel plated brass body.
Poppet valve and seal in EPDM.
Rod seals in ethylene-propylene.
Stainless steel springs.
Handwheel for manual opening in ABS.
Threaded connections FF UNI-EN-ISO 228.

- Max temperature 5...95 °C
- Max operating pressure 1000 kPa
- Max differential pressure 100 KPa

■ Technical drawing, page 11.21

3 way compact, motorizable zone valve - filling unit inlets

Vanne de zone compacte motorisable à 3 voies - raccords à tubulure

Компактный трёхходовой зонный клапан (управляется сервоприводом) с патрубками

Supapă de zonă compactă cu acționare cu motor cu 3 căi - prinderi cu racord

Válvula de zona compacta motorizable de 3 vías - conexiones de boca de llenado

Motorisierbares Zonenventil kompakt mit 3 Wege - Stutzenanschluss

Code Code Артикул Cod Código Code	Size Taille Размер Dimensiune Medida Abmessung	Model Modèle Модель Model Modelo Modell	EURO EURO EURO EURO EURO EURO	Pack Cond. Уп-ка Ambalaj Caja Verp.
813.05.20	3/4"	Zona 3C	-	1
813.06.20	1"	Zona 3C	-	1

New

Prearranged for thermo-electric actuators code 2944.00. X2

013

736

4-way compact, motorizable zone valve.

Normally Closed on direct route with mounted servomotor, not powered.

Can be coupled to Monoblock coplanar manifolds.

Nickel plated brass body.
Poppet valve and seal in EPDM.
Rod seals in ethylene-propylene.
Stainless steel springs.
Handwheel for manual opening in ABS.
In-line threaded connections FF UNI-EN-ISO 228.
Centre distance 50...55mm

- Max temperature 5...95 °C
- Max operating pressure 1000 kPa
- Max differential pressure 100 KPa

■ Technical drawing, page 11.21

4 way compact, motorizable zone valve - filling unit inlets

Vanne de zone compacte motorisable à 4 voies - raccords à tubulure

Компактный четырёхходовой зонный клапан (управляется сервоприводом) с патрубками

Supapă de zonă compactă cu acționare cu motor cu 4 căi - prinderi cu racord

Válvula de zona compacta motorizable de 4 vías - conexiones de boca de llenado

Motorisierbares Zonenventil kompakt mit 4 Wege - Stutzenanschluss

Code Code Артикул Cod Código Code	Size Taille Размер Dimensiune Medida Abmessung	Model Modèle Модель Model Modelo Modell	EURO EURO EURO EURO EURO EURO	Pack Cond. Уп-ка Ambalaj Caja Verp.
736.05.20	3/4"	Zona 4C	-	1
736.06.20	1"	Zona 4C	-	1

New

Installable on coplanar manifolds.
Adjustable centre distance 50...55 mm.

Prearranged for thermo-electric actuators code 2944.00. X2

013

100% MADE IN ITALY

2944

Thermo-electrically controlled actuator for compact zone valves, complete with valve body clamping ring nut and electric power cable.

Normally closed valve position when power missing.

- Power supply 24/230 V
- Consumption 2 W
- Frequency 50/60 Hz
- Electric protection IP44
- Operating temperature 5...50 °C
- Switch context capacity (0.5A) 1 A (where present)
- 5 mm stroke
- Size (lxhxp): 44x52x60 mm

■ Technical drawing, page 11.12

Thermo-electrically controlled actuator

Servomoteur à commande électrothermique

Электротермический сервопривод

Servomotor cu comandă electrotermică

Cabezal electrotérmico normalmente cerrado para válvulas termostatizables y válvulas de zona compactas

Servomotor mit elektrothermischer Steuerung

Code Code Артикул Cod Código Code	Power supply Alimentation Питание Alimentare Alimentación Versorgung	EURO EURO EURO EURO EURO EURO	Pack Cond. Уп-ка Ambalaj Caja Verp.
2944.00.02	230V AC	-	1
2944.00.12	24V AC	-	1

Version without auxiliary microswitch (2 wires)

Thermo-electrically controlled actuator with auxiliary microswitch.

Servomoteur à commande électrothermique avec microrupteur auxiliaire

Электротермический сервопривод с вспомогательным микропереключателем

Servomotor cu comandă electrotermică, cu microîntrerupător auxiliar

Cabezal electrotérmico normalmente cerrado con microinterruptor, para válvula termostatizable y válvula de zona compacta

Servomotor mit elektrothermischer Steuerung mit Hilfmikroschalter

Code Code Артикул Cod Código Code	Power supply Alimentation Питание Alimentare Alimentación Versorgung	EURO EURO EURO EURO EURO EURO	Pack Cond. Уп-ка Ambalaj Caja Verp.
2944.00.42	230V AC	-	1
2944.00.52	24V AC	-	1

Version supplied with auxiliary microswitch (4 wires)

CONTAINMENT BOXES

CAISSES DE RANGEMENT

МОНТАЖНЫЕ ШКАФЫ ДЛЯ СОДЕРЖИМОГО

CASETE DE REȚINERE

CAJAS CONTENEDORAS

KASTENBEHÄLTER

Plastic boxes

Metal boxes

85

Manifold plastic containment and inspection box without bottom, complete with removable cover with ventilation slots, counter frame, fixing screws and removable protection for plastering.

Recessed assembly

■ Technical drawing, page 11.21

Plastic box without bottom
Coffret en plastique sans fond
Пластиковый монтажный шкаф
Casetă din plastic fără fund
Caja en plástico empotrable sin fondo
Kasten aus Kunststoff ohne Boden

Code Code Артикул Cod Código Code	Size Taille Размер Dimensiune Medida Abmessung	Model Modèle Модель Model Modelo Modell	EURO EURO EURO EURO EURO EURO	Pack Cond. Уп-ка Ambalaj Caja Verp.
85.35.00	250x350	SF	-	24
85.50.00	250x500	SF	-	18
85.58.00	310x580	SF	-	13
85.40.00	400x500	SF	-	13
85.75.00	360x750	SF	-	14

sizes in mm

Supplied for protection during plastering. Paintable cover

018

86

Manifold plastic containment and inspection box with bottom, complete with removable cover with ventilation slots, counter frame, fixing screws and removable protection for plastering.

Recessed assembly

■ Technical drawing, page 11.21

Plastic box with bottom
Coffret en plastique avec fond
Пластиковый монтажный шкаф
Casetă din plastic cu fund
Caja en plástico empotrable con fondo
Kasten aus Kunststoff mit Boden

Code Code Артикул Cod Código Code	Size Taille Размер Dimensiune Medida Abmessung	Model Modèle Модель Model Modelo Modell	EURO EURO EURO EURO EURO EURO	Pack Cond. Уп-ка Ambalaj Caja Verp.
86.35.00*	250x350	CF	-	18
86.50.00*	250x500	CF	-	11
86.58.00*	310x580	CF	-	10
86.40.00*	400x500	CF	-	9
86.75.00**	360x750	CF	-	10

*Adjustable depth 85÷100mm
**Adjustable depth 95÷120mm
sizes in mm

Supplied for protection during plastering. Paintable cover

018

362

Manifold plastic containment and inspection box with bottom and side closures, complete with removable cover with ventilation slots, brackets and fixing screws for single manifolds ø3/4" centre distance 37 mm.

Recessed assembly

■ Technical drawing, page 11.21

Plastic box with bottom closed laterally
Coffret en plastique avec fond Fermeture latérale
Пластиковый монтажный шкаф закрытый сбоку
Casetă din plastic cu fund închisă în partea laterală
Caja en plástico empotrable con fondo, cerrada lateralmente
Kasten aus Kunststoff mit Boden seitlich geschlossen

Code Code Артикул Cod Código Code	Size Taille Размер Dimensiune Medida Abmessung	Model Modèle Модель Model Modelo Modell	EURO EURO EURO EURO EURO EURO	Pack Cond. Уп-ка Ambalaj Caja Verp.
362.35.00*	250x350	CFC	-	10
362.50.00*	250x500	CFC	-	4

*Fixed depth 100 mm
sizes in mm

Paintable cover.

018

100% MADE IN ITALY

128

Pair of plastic brackets to fix one-sided and two-sided manifolds in plastic boxes (for boxes code 86.XX.XX).

Bracket centre distance 50 mm (3/4") 55 mm (1")

Pair of plastic brackets
Jeu de deux étriers en plastique
Пара пластиковых хомутов
Pereche de bride din plastic
Par de soportes para colector coplanar monolateral o bilateral para fijación a caja en plástico cód. 86.xx.xx
Bügelpaar aus Kunststoff

Code Code Артикул Cod Código Code	Size Taille Размер Dimensiune Medida Abmessung	EURO EURO EURO EURO EURO EURO	Pack Cond. Уп-ка Ambalaj Caja Verp.
128.05.00	3/4"	-	1
128.06.00	1"	-	1

129

Pair of plastic brackets to fix Single manifolds in plastic boxes (for boxes code 86.XX.XX).

Bracket centre distance 114,5 mm

Pair of plastic brackets
Jeu de deux étriers en plastique
Пара пластиковых хомутов
Pereche de bride din plastic
Par de soportes para colector simple para fijación a caja en plástico cód. 86.xx.xx
Bügelpaar aus Kunststoff

Code Code Артикул Cod Código Code	Size Taille Размер Dimensiune Medida Abmessung	EURO EURO EURO EURO EURO EURO	Pack Cond. Уп-ка Ambalaj Caja Verp.
129.05.00	3/4"	-	1
129.06.00	1"	-	1

100% MADE IN ITALY

027

2606

Manifold galvanised steel sheet containment and inspection box with bottom and side closures, complete with mobile bracket guides and removable cover in paintable plastic.

Recessed assembly.

Recessed metal box for manifolds, with plastic cover

Coffret métallique encastrable pour collecteurs, couvercle plastique

Металлический встраиваемый монтажный шкаф для коллекторов с пластмассовой крышкой

Casetă metalică cu încastrare pentru colectoare, cu capac din plastic

Caja metálica empotrable para colectores con tapa en plástico, color blanco

Metallkasten zum Einbau für Sammler mit Kunststoffdeckel

Code Code Артикул Cod Código Code	Size LxH1 Dimension LxH1 Размер LxH1 Dimensiune LxH1 Medida LxH1 Abmessung LxH1	EURO EURO EURO EURO EURO EURO	Pack Cond. Уп-ка Ambalaj Caja Verp.
2606.40.02	400x500	-	1
2606.60.02	600x500	-	1
2606.80.02	800x500	-	1
2606.10.02	1000x500	-	1

adjustable depth 80÷130 mm (depth 80÷150 mm if including the lenght of the cover's fixing screws).
sizes in mm

Pair of floor-anchoring feet

Couple de pieds pour la fixation au sol de la caisse

Пара ножек для крепления монтажного шкафа к полу

Pereche de picioruşe pentru fixarea la sol a casetei

Par de pies para la fijación de la caja al suelo

Fußpaarzur Befestigung des Kastens am Boden

Code Code Артикул Cod Código Code	EURO EURO EURO EURO EURO EURO	Pack Cond. Уп-ка Ambalaj Caja Verp.
2948.00.02	-	1

Product in preparation.

Paintable plastic cover.

041

899

Pair of plastic brackets to fix Single manifolds in metal boxes (for boxes code 2606.XX.02).

Bracket centre distance 220 mm

Pair of plastic brackets

Jeu de deux étriers en plastique

Пара пластиковых хомутов

Pereche de bride din plastic

Par de soportes para colector simple para fijación a caja metálica

Bügelpaar aus Kunststoff

Code Code Артикул Cod Código Code	Size Taille Размер Dimensiune Medida Abmessung	EURO EURO EURO EURO EURO EURO	Pack Cond. Уп-ка Ambalaj Caja Verp.
899.00.00	3/4" - 1"	-	1

FITTINGS

RACCORDS

ФИТИНГИ

FITINGURI

RACORES

ANSCHLUSSTEILE

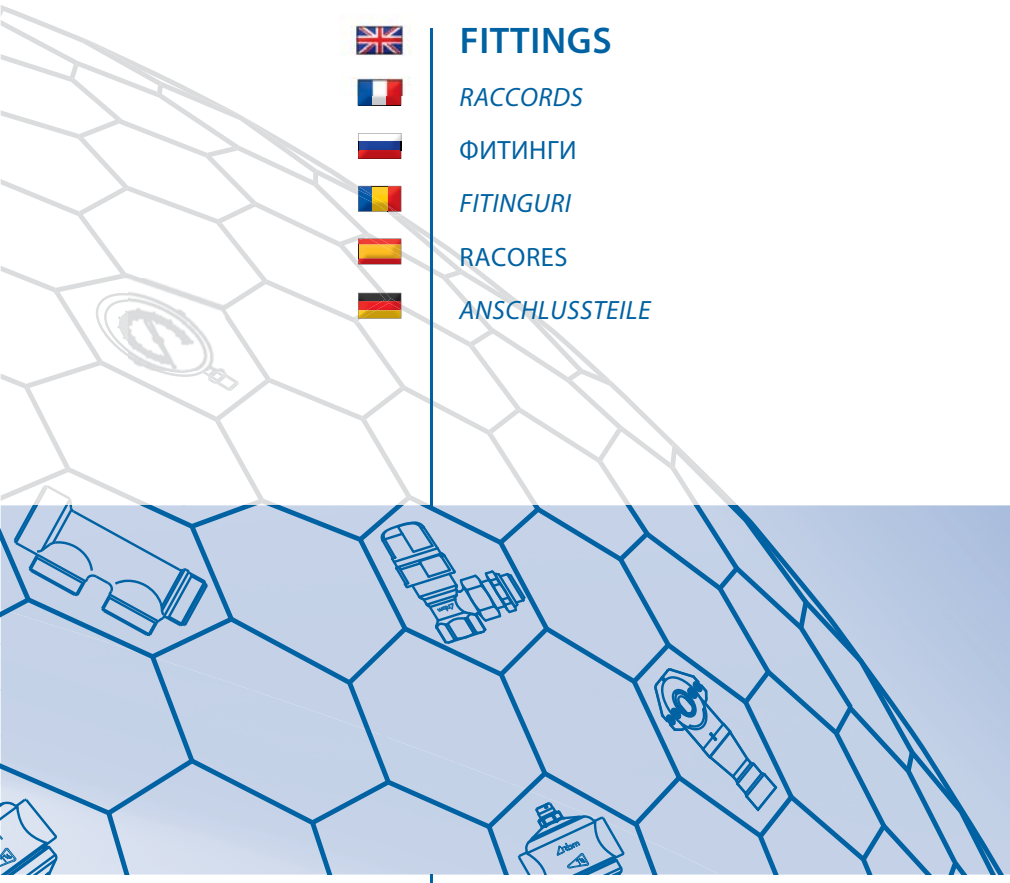

Fittings with
RBM standard thread

Fittings for iron, copper
and polyethylene pipes

Fittings with
Euroconus thread

Accessories for manifolds

Jet-Line fittings

041

69

Spanner for fitting with Standard RBM thread.

Angled 1/2" connection, for combination or torque wrenches, to easily tighten fitting in any position.

Spanner for Standard RBM fitting.
Clé pour raccord standard RBM
Ключ к стандартным фитингам RBM
Cheie pentru racord Standard RBM
Llave hexagonal abierta para adaptadores Standard RBM
Schlüssel für Standardanschluss RBM

Code Code Артикул Cod Código Code	Size Taille Размер Dimensiune Medida Abmessung	EURO EURO EURO EURO EURO EURO	Pack Cond. Уп-ка Ambalaj Caja Verp.
69.00.00	Ch 28	-	10

040

311

Y-shaped fitting to split copper, polyethylene and multilayer circuits.

Nickel plated brass body
Nitrile seals
Standard RBM rotary threaded connection W24.5x19F
Standard RBM split threaded connections W24.5x19F

- Max operating pressure 100 °C
- Max operating pressure 1000 kPa

Y-shaped fitting
Raccord en Y
Фитинг Y-образный
Racord în formă de Y
Racor en Y para desdoblar una conexión Standar RBM
Y-Anschluss

Code Code Артикул Cod Código Code	Size A Dimension A Размер A Dimensiunea A Medida A Abmessung A	Size B Dimension B Размер B Dimensiunea B Medida B Abmessung B	EURO EURO EURO EURO EURO EURO	Pack Cond. Уп-ка Ambalaj Caja Verp.
311.00.00	RBM	RBM	-	10

Standard RBM thread W 24.5x19 F

Allows to split circuits deriving from RBM manifolds

029

41

Chrome plated compression fitting for annealed copper pipe.

Brass nut and pipe clamping ogive
Nickel plated nut.
Seal ogive in Nitrile.
Threaded F standard RBM connection.

- Max operating pressure 95 °C
- Max operating pressure 1000 kPa

Fitting for copper pipe with nitrile ogive
Raccord pour tube cuivre avec ogive en nitrile
Фитинг для медных труб с нитриловой прокладкой
Racord pentru conductă din cupru cu ogivă nitril
Adaptador Standard RBM para tubo de cobre recocido
Anschluss für Kupferohr mit Nitrilkopf

Code Code Артикул Cod Código Code	Size Taille Размер Dimensiune Medida Abmessung	EURO EURO EURO EURO EURO EURO	Pack Cond. Уп-ка Ambalaj Caja Verp.
41.10.20	Ø10	-	10
41.12.20	Ø12	-	10
41.14.20	Ø14	-	10
41.15.20	Ø15	-	10
41.16.20	Ø16	-	10

Standard RBM thread W 24.5x19 F

029

41

Compression fitting for annealed copper pipe.

Brass nut and pipe clamping ogive
Nickel plated nut.
Seal ring in Nitrile.
Threaded F standard RBM connection.

- Max operating pressure 95 °C
- Max operating pressure 1000 kPa

Copper pipe fitting
Raccord pour tube cuivre
Фитинг для медных труб
Racord pentru conductă de cupru
Adaptador Standard RBM para tubo de cobre recocido
Anschluss für Kupferrohr

Code Code Артикул Cod Código Code	Size Taille Размер Dimensiune Medida Abmessung	EURO EURO EURO EURO EURO EURO	Pack Cond. Уп-ка Ambalaj Caja Verp.
41.18.40	Ø18	-	10

Standard RBM thread W 24.5x19 F

Only to be used with seat set at Ø18

To be used with reduction cod. 57.18.00 (see page 10.10) for the connection of the Ø18 outlet to valves/manifolds with Standard RBM threading.

100% MADE IN ITALY

602

KEEP: Compression fitting for raw copper pipe in bars, annealed copper, brass, soft steel and stainless steel.

Brass nut and pipe clamping ogive
Nickel plated nut.
Seal ogive in Nitrile.
Threaded F standard RBM connection.

- Max operating pressure 95 °C
- Max operating pressure 1000 kPa

Fitting for copper pipe, brass pipe, steel pipe with nitrile ogive
Raccord pour tube cuivre, tube laiton, tube acier avec ogive en nitrile
Фитинг для медных, латунных и стальных труб с нитриловой прокладкой
Racord pentru conductă din cupru, conductă de alamă, conductă de oțel cu ogivă nitril
Adaptador Standard RBM para tubo de cobre crudo, cobre recocido y acero.
Anschluss für Kupferrohr, Messingrohr, Stahlrohr mit Nitrilkopf

Code Code Артикул Cod Código Code	Size Taille Размер Dimensiune Medida Abmessung	EURO EURO EURO EURO EURO EURO	Pack Cond. Уп-ка Ambalaj Caja Verp.
602.10.00	Ø10	-	10
602.12.00	Ø12	-	10
602.14.00	Ø14	-	10
602.15.00	Ø15	-	10
602.16.00	Ø16	-	10

Standard RBM thread W 24.5x19 F
Patent n° TO2001U000071

029

71

Compression fitting for polyethylene pipe.

Brass nut, core and pipe clamping ogive
Nickel plated nut.
Seal ring in Nitrile.
Threaded F standard RBM connection.

- Max operating pressure 95 °C
- Max operating pressure 1000 kPa

Polyethylene pipe fitting
Raccord pour tube polyéthylène
Фитинг для полиэтиленовых труб
Racord pentru conductă de polietilenă
Adaptador Standard RBM para tubo de polietileno
Anschlüsse für Polyethylenrohr

Code Code Артикул Cod Código Code	Size Taille Размер Dimensiune Medida Abmessung	EURO EURO EURO EURO EURO EURO	Pack Cond. Уп-ка Ambalaj Caja Verp.
71.10.20	10,5x1,25	-	10
71.10.30	10x1,2	-	10
71.12.00	12x2	-	10
71.12.20	12x1,3	-	10
71.14.00	14x2	-	10
71.15.00	15x2,5	-	10
71.15.10	15x2	-	10
71.16.00	16x2	-	10
71.16.20	16x1,5	-	10
71.16.30	16x2,7	-	10
71.16.40	16x2,2	-	10
71.17.00	17x2	-	10
71.18.00	18x2,5	-	10
71.18.30	18x2	-	10
71.20.10	20x2	-	10
71.20.40	20x2,8	-	10

Standard RBM thread W 24.5x19 F
Size: Outside Ø x pipe thickness

029

122

Compression fitting for polyethylene pipe.

Brass nut, core and pipe clamping ogive
Nickel plated nut.
Nitrile seals.
Threaded F standard RBM connection.

- Max operating pressure 95 °C
- Max operating pressure 1000 kPa

Polyethylene pipe fitting
Raccord pour tube polyéthylène
Фитинг для полиэтиленовых труб
Racord pentru conductă din polietilenă
Adaptador Standard RBM para tubo de polietileno, con certificación CSTBat
Anschlüsse für Polyethylenrohr

Code Code Артикул Cod Código Code	Size Taille Размер Dimensiune Medida Abmessung	EURO EURO EURO EURO EURO EURO	Pack Cond. Уп-ка Ambalaj Caja Verp.
122.12.00	12x1,1	-	10
122.16.00	16x1,5	-	10
122.20.00	20x1,9	-	10

Standard RBM thread W 24.5x19 F
Size: Outside Ø x pipe thickness

029

1927

Quick coupling fitting for multilayer pipe.

Transparent technopolymer body
Brass core
Stainless steel AISI 301 pipe clamp
Peroxidic EPDM seals
Standard RBM threaded connection W 24.5x19F

- Max operating pressure 95°C
- Max operating pressure 1000 kPa

Quick coupling fitting for multilayer pipe
Raccord à attache rapide pour tube polyéthylène multicouche
Фитинг с системой быстрого монтажа для металлопластиковых труб
Racord cu cuplare rapidă pentru conductă din polietilenă multistrat
Racor Rápido recto para conexión Standard RBM, para tubo multicapa
Schnellsteckkupplung für Mehrschichtverbundrohr für mehrschichtiges Polyethylenrohr

Code Code Артикул Cod Código Code	Size A Dimension A Размер A Dimensiunea A Medida A Abmessung A	Size B Dimension B Размер B Dimensiunea B Medida B Abmessung B	EURO EURO EURO EURO EURO EURO	Pack Cond. Уп-ка Ambalaj Caja Verp.
1927.16.00	16x2	RBM	-	10
1927.20.00	20x2	RBM	-	10

Standard RBM thread W 24.5x19 F
Size A: Outside Ø x pipe thickness

029

Quick connection on radiators with standard RBM thread

70

Compression fitting for multilayer pipe.

Brass nut, core and pipe clamping ogive
Nickel plated nut.
Seals in Nitrile-EPDM.
Threaded F standard RBM connection.
Compatible with Q-Tec copper pipe in matching sizes.
Respect the pipe flaring and gauging conditions.

- Max operating pressure 95 °C
- Max operating pressure 1000 kPa

Multilayer pipe fitting
Raccord pour tube polyéthylène multicouche
Фитинг для металлопластиковых труб
Racord pentru conductă din polietilenă multistrat
Adaptador Standard RBM para tubo multicapa
Anschluss für mehrschichtige Polyethylenrohr

Code Code Артикул Cod Código Code	Size Taille Размер Dimensiune Medida Abmessung	EURO EURO EURO EURO EURO EURO	Pack Cond. Уп-ка Ambalaj Caja Verp.
70.12.90	12x1,9	-	10
70.14.00	14x2	-	10
70.14.90	14,4x2,2	-	10
70.16.00	16x2	-	10
70.16.10	16x2,5	-	10
70.16.20	16x2,25	-	10
70.16.30	16,2x2,6	-	10
70.16.90	16,4x2,2	-	10
70.17.10	17x2	-	10
70.17.30	17x3	-	10
70.17.40	17,2x3	-	10
70.18.00	18x2	-	10
70.20.00	20x2	-	10
70.20.10	20x2,5	-	10
70.20.20	20x2,25	-	10
70.20.30	20x2,9	-	10

Standard RBM thread W 24.5x19 F
Size: Outside Ø x pipe thickness

- CSTBat (ø 14x2 - 16x2 - 20x2)

029

1216

Compression fitting for multilayer pipe.

Brass nut and pipe clamping ogive
Nickel plated nut.
Technopolymer core.
Seal ring in Nitrile.
Threaded F standard RBM connection.

- Max operating pressure 95 °C
- Max operating pressure 1000 kPa

Fitting for multilayer pipe, technopolymer core
Raccord pour tube polyéthylène multicouche âme en technopolymère
Фитинг для металлопластиковых труб, цанговый штуцер из технополимера
Racord pentru conductă din polietilenă multistrat cu miezul din tehno-polimer
Adaptador Standard RBM para tubo multicapa con casquillo de refuerzo en tecnopolímero
Anschlüsse für mehrschichtiges Polyethylenrohr Kern aus Technopolymere

Code Code Артикул Cod Código Code	Size Taille Размер Dimensiune Medida Abmessung	EURO EURO EURO EURO EURO EURO	Pack Cond. Уп-ка Ambalaj Caja Verp.
1216.14.00	14x2	-	10
1216.16.00	16x2	-	10

Standard RBM thread W 24.5x19 F
Size: Outside Ø x pipe thickness

029

1944

Compression fitting for multilayer pipe.

Nickel plated brass nut.
Technopolymer core pipe clamping ogive.
Nitrile-EPDM seals.
Standard RBM threaded connection.

- Max operating pressure 95°C
- Max operating pressure 1000 kPa

Fitting for multilayer pipe. technopolymer core and ogive.

Raccord pour tube polyéthylène multicouche âme et ogive en technopolymère

Фитинг для металлопластиковых труб, цанговый штуцер из технополимера

Racord pentru conductă din polietilenă multistrat cu miezul din tehnopolimer

Adaptador Standar RBM para tubo multicapa con base y anillo en tecnopolímero

Anschlüsse für mehrschichtiges Polyethylenrohr Kern aus Technopolymere

Code Code Артикул Cod Código Code	Size Taille Размер Dimensiune Medida Abmessung	EURO EURO EURO EURO EURO EURO	Pack Cond. Уп-ка Ambalaj Caja Verp.
1944.16.00	16x2	-	10

Standard RBM thread W 24.5x19 F
Size: Outside Ø x pipe thickness

826

Press fitting for multilayer pipe.

Nickel plated brass body
EPDM seals
Stainless steel pipe clamping bush
Dielectric pipe clamp cover in PE

- Max operating pressure 95 °C
- Max operating pressure 1000 kPa

Press fitting for multilayer pipe

Raccord à presser pour tube polyéthylène multicouche

Пресс-фитинг для металлопластиковых труб

Racord cu presare pentru conductă din polietilenă multistrat

Racor Press Fitting recto con tuerca loca para conexión Standard RBM, para tubo multicapa

Steckanschluss für mehrschichtige Polyethylenrohr

Code Code Артикул Cod Código Code	Size A Dimension A Размер A Dimensiunea A Medida A Abmessung A	Size B Dimension B Размер B Dimensiunea B Medida B Abmessung B	EURO EURO EURO EURO EURO EURO	Pack Cond. Уп-ка Ambalaj Caja Verp.
826.14.00	14x2	RBM	-	10
826.16.00	16x2	RBM	-	10
826.18.00	18x2	RBM	-	10
826.20.00	20x2	RBM	-	10

Standard RBM thread W 24.5x19 F
Size A: Outside Ø x pipe thickness

Multi-clamp fitting.

5

Heavy three-piece elbow fitting.

Nickel plated brass body.
O-Ring seal in FKM
Threaded connections MF UNI-EN-ISO 228.

- Max operating pressure 180°C
- Max operating pressure 1000 kPa

Three-piece elbow fitting heavy series
Raccord en trois pièces de type coudé série lourde
Угловое соединение из 3-х частей тяжелая серия
Racord din trei bucăți de tip curbat seria debit masiv
Racor 3 piezas curvo Macho-Hembra rosca Gas, Niquelado
Anschluss aus drei Teilen bogenartig schwere Ausführung

Code Code Артикул Cod Código Code	Size Taille Размер Dimensiune Medida Abmessung	EURO EURO EURO EURO EURO EURO	Pack Cond. Уп-ка Ambalaj Caja Verp.
5.03.1B	3/8"	-	10
5.04.1B	1/2"	-	10
5.05.1B	3/4"	-	10
5.06.1B	1"	-	10
5.07.1B	1"1/4	-	8
5.08.1B	1"1/2	-	4
5.09.1B	2"	-	2

Suitable for gas, air, hot and cold drinking water, hydrocarbons, solar systems

040

58

Fitting for pipe connection to manifold / Heavy three-piece straight fitting.

Nickel plated brass body.
O-Ring seal in FKM
Threaded connections MF UNI-EN-ISO 228.

- Max operating pressure 180 °C
- Max operating pressure 1000 kPa

Three-piece straight fitting heavy series
Raccord en trois pièces de type droit série lourde
Прямое соединение из 3-х частей тяжелая серия
Racord din trei bucăți de tip drept seria debit masiv
Racor 3 piezas recto Macho-Hembra rosca Gas, Niquelado
Anschluss aus drei Teilen gradlinienartig schwere Ausführung

Code Code Артикул Cod Código Code	Size Taille Размер Dimensiune Medida Abmessung	EURO EURO EURO EURO EURO EURO	Pack Cond. Уп-ка Ambalaj Caja Verp.
58.03.00	3/8"	-	25
58.04.00	1/2"	-	25
58.05.00	3/4"	-	25
58.06.00	1"	-	25
58.07.00	1"1/4	-	8
58.08.00	1"1/2	-	5
58.09.00	2"	-	2

Suitable for gas, air, hot and cold drinking water, hydrocarbons, solar systems

040

5

Three-piece elbow fitting.

Brass body.
O-Ring seal in FKM
Threaded connections MF UNI-EN-ISO 228.

- Max operating pressure 180 °C
- Max operating pressure 1000 kPa

Elbow type three-piece fitting
Raccord trois pièces de type coude
Угловое соединение из 3-х частей
Racord din trei piese de tip curbat
Racor 3 piezas curvo Macho-Hembra rosca Gas
Anschluss aus drei Teilen bogenartig

Code Code Артикул Cod Código Code	Size Taille Размер Dimensiune Medida Abmessung	EURO EURO EURO EURO EURO EURO	Pack Cond. Уп-ка Ambalaj Caja Verp.
5.03.10	3/8"	-	10
5.04.10	1/2"	-	10
5.05.10	3/4"	-	10
5.06.10	1"	-	10
5.07.10	1"1/4	-	8
5.08.10	1"1/2	-	4
5.09.10	2"	-	2

Suitable for gas, air, hot and cold drinking water, hydrocarbons, solar systems

040

ATTESTATION DE CONFORMITÉ SANITAIRE ACS

100% MADE IN ITALY

6

Three-piece straight fitting.

Brass body.
O-Ring seal in FKM.
Threaded connections MF UNI-EN-ISO 228.

- Max operating pressure 180 °C
- Max operating pressure 1000 kPa

Straight type three-piece fitting
Raccord trois pièces de type droit
Прямое соединение из 3-х частей
Racord din trei piese de tip drept
Racor 3 piezas recto Macho-Hembra rosca Gas
Anschluss aus drei Teilen gradlinienartig

Code Code Артикул Cod Código Code	Size Taille Размер Dimensiune Medida Abmessung	EURO EURO EURO EURO EURO EURO	Pack Cond. Уп-ка Ambalaj Caja Verp.
6.03.10	3/8″	-	10
6.04.10	1/2″	-	10
6.05.10	3/4″	-	10
6.06.10	1″	-	10
6.07.10	1″1/4	-	8
6.08.10	1″1/2	-	5
6.09.10	2″	-	2

Suitable for gas, air, hot and cold drinking water, hydrocarbons, solar systems

040

97

Fitting for pipe connection to manifold / Three-piece straight fitting, with 5 mm off-centre adjustment.

Nickel plated brass body.
O-Ring seal in ethylene propylene and nitrile.
Threaded connections MF UNI-EN-ISO 228.

- Max operating pressure 110 °C
- Max operating pressure 1000 kPa

Off-centre three-piece fitting
Raccord en trois pièces à excentrique
Эксцентрический фитинг из 3-х частей тяжелая серия
Racord din trei bucăți cu excentric
Racor 3 piezas excéntrico Macho-Hembra rosca Gas, niquelado
Anschluss aus drei Teilen konzentrisch

Code Code Артикул Cod Código Code	Size Taille Размер Dimensiune Medida Abmessung	EURO EURO EURO EURO EURO EURO	Pack Cond. Уп-ка Ambalaj Caja Verp.
97.05.00	3/4″	-	10
97.06.00	1″	-	10

040

72

Three-piece MM joint straight fitting

Nickel plated brass body.
O-Ring seal in ethylene propylene and nitrile.
Threaded connections MM UNI-EN-ISO 228.

- Max operating pressure 110 °C
- Max operating pressure 1000 kPa

Three-piece mm joint fitting
Raccord de jonction mm en trois pièces
Фитинг из 3-х частей нар. - нар.
Racord de cuplare mm din trei bucăți
Racor 3 piezas recto Macho-Macho rosca gas
Vereinigungsanschluss mm aus drei Teilen

Code Code Артикул Cod Código Code	Size A Dimension A Размер A Dimensiunea A Medida A Abmessung A	Size B Dimension B Размер B Dimensiunea B Medida B Abmessung B	EURO EURO EURO EURO EURO EURO	Pack Cond. Уп-ка Ambalaj Caja Verp.
72.04.00	1/2″	1/2″	-	25
72.05.00	3/4″	3/4″	-	10
72.06.00	1″	1″	-	10
72.06.50	1″	1″1/4	-	6
72.07.00	1″1/4	1″1/4	-	10
72.08.00	1″1/2	1″1/2	-	5
72.09.00	2″	2″	-	2

040

1100

Three-piece MM joint fitting with OR seal on connections.

Nickel plated brass body.
Nitrile seal.
Threaded connections UNI-EN-ISO 228.

- Max operating pressure 100 °C
- Max operating pressure 1000 kPa

Joint fitting mm with OR seals
Raccord de jonction mm avec joints toriques
Фитинг из 3-х частей нар. - нар. С уплотнениями or
Racord de cuplare mm cu garnituri or
Racor 3 piezas recto Macho-Macho rosca gas, con autojunta
Vereinigungsanschluss mm mit OR-Dichtung

Code Code Артикул Cod Código Code	Size Taille Размер Dimensiune Medida Abmessung	EURO EURO EURO EURO EURO EURO	Pack Cond. Уп-ка Ambalaj Caja Verp.
1100.05.00	3/4″	-	10
1100.06.00	1″	-	10

Use for connecting manifolds to zone valves. Used on RBM products with prearrangement on OR seal (filters, pressure reducing valves, etc.)

040

100% MADE IN ITALY

164

40mm extension for copper pipe.

Nickel plated brass body.
PTFE seals.
Threaded F standard RBM connection.

- Max operating pressure 95 °C
- Max operating pressure 1000 kPa

040

40mm extension for copper pipe.
Rallonge pour tuyau cuivre 40 mm
Удлинитель 40 мм для медной трубы
Prelungitor pentru conductă de cupru 40mm
Prolongador 40mm conexión Standard RBM
Verlängerung für Kupferrohr 40 mm

Code Code Артикул Cod Código Code	Size Taille Размер Dimensiune Medida Abmessung	EURO EURO EURO EURO EURO EURO	Pack Cond. Уп-ка Ambalaj Caja Verp.
164.04.00	Ø10	-	10
164.04.10	Ø12	-	10
164.04.20	Ø14	-	10

Standard RBM thread W 24.5x19 F

139

Compression fitting for copper pipe.

Nickel plated brass nut.
Nitrile seal ogive.
Threaded connection F UNI-EN-ISO 228.

- Max operating pressure 95 °C
- Max operating pressure 1000 kPa

029

Fitting for copper pipe with nitrile ogive
Raccord pour tube cuivre avec ogive en nitrile
Фитинг для медных труб с нитриловым кольцом
Racord pentru conductă din cupru cu ogivă din nitril
Adaptador G1/2" para tubo de cobre recocido
Anschluss für Kupferrohr mit Kopgf aus Nitril

Code Code Артикул Cod Código Code	Size A Dimension A Размер A Dimensiunea A Medida A Abmessung A	Size B Dimension B Размер B Dimensiunea B Medida B Abmessung B	EURO EURO EURO EURO EURO EURO	Pack Cond. Уп-ка Ambalaj Caja Verp.
139.10.50	1/2"	Ø10	-	10
139.12.50	1/2"	Ø12	-	10
139.14.50	1/2"	Ø14	-	10

Used with extension code 164.04.xx

81

In-line fitting for copper, polyethylene and multilayer pipe joint.

Nickel plated brass body.
Standard RBM threaded M connection.

- Max operating pressure 110 °C
- Max operating pressure 1000 kPa

040

Intermediate straight fitting
Raccord droit intermédiaire
Прямой промежуточный фитинг
Racord drept intermediar
Manguito para adaptadores Standard RBM
Gerade Anschluss Zwischenstück

Code Code Артикул Cod Código Code	Size A Dimension A Размер A Dimensiunea A Medida A Abmessung A	Size B Dimension B Размер B Dimensiunea B Medida B Abmessung B	EURO EURO EURO EURO EURO EURO	Pack Cond. Уп-ка Ambalaj Caja Verp.
81.00.00	RBM	RBM	-	30

Standard RBM thread W 24.5x19 F

83

In-line fitting for copper, polyethylene and multilayer pipe joint.

Nickel plated brass body.
Threaded connection
M standard RBM
M UNI-EN-ISO 228.

- Max operating pressure 110 °C
- Max operating pressure 1000 kPa

040

Straight fitting with male connection
Raccord droit à branchement mâle
Прямой фитинг с наружной резьбой
Racord drept cu prindere de tip tată
Racor recto Macho – Adaptador RBM
Gerade Anschluss mit Steckverbindung

Code Code Артикул Cod Código Code	Size A Dimension A Размер A Dimensiunea A Medida A Abmessung A	Size B Dimension B Размер B Dimensiunea B Medida B Abmessung B	EURO EURO EURO EURO EURO EURO	Pack Cond. Уп-ка Ambalaj Caja Verp.
83.03.00	3/8" M	RBM	-	30
83.04.00	1/2" M	RBM	-	30

Standard RBM thread W 24.5x19 F

Adapter piece iron pipe valves for copper or plyethylene pipe.

100% MADE IN ITALY

041

246

Spanner for fitting with Euroconus thread.

Angled 1/2" connection, for combination or torque wrenches, to easily tighten fitting in any position.

Spanner for Euroconus fitting.
Clé pour raccord Euroconus
Ключ для фитинга Euroconus
Cheie pentru racord Euroconus
Llave hexagonal abierta para adaptadores Euroconus
Schlüssel für Euroconus-Anschluss

Code Code Артикул Cod Código Code	Size Taille Размер Dimensiune Medida Abmessung	EURO EURO EURO EURO EURO EURO	Pack Cond. Уп-ка Ambalaj Caja Verp.
246.00.00	CH 30	-	10

029

263

Chrome plated compression fitting for annealed copper pipe.

Brass ogive.
Nickel plated brass nut.
Nitrile seal ogive.
Euroconus threaded connection F G3/4".

- Max operating pressure 95 °C
- Max operating pressure 1000 kPa

Fitting for copper pipe with nitrile ogive
Raccord pour tube cuivre avec ogive en nitrile
Фитинг для медных труб с нитриловой прокладкой
Racord pentru conductă din cupru cu ogivă nitril
Adaptador Euroconus para tubo de cobre recocido
Anschluss für Kupferohr mit Nitrilkopf

Code Code Артикул Cod Código Code	Size Taille Размер Dimensiune Medida Abmessung	EURO EURO EURO EURO EURO EURO	Pack Cond. Уп-ка Ambalaj Caja Verp.
263.12.20	Ø12	-	10
263.15.20	Ø15	-	10

Euroconus thread G 3/4" UNI-EN-ISO 228

029

361

Chrome plated compression fitting for annealed copper pipe.

Brass ogive.
Nickel plated brass nut.
Nitrile seal ogive.
Euroconus threaded connection F G3/4".

- Max operating pressure 95 °C
- Max operating pressure 1000 kPa

Fitting for copper pipe with nitrile ogive
Raccord pour tube cuivre avec ogive en nitrile
Фитинг для медных труб с нитриловой прокладкой
Racord pentru conductă din cupru cu ogivă nitril
Adaptador Euroconus premontado para tubo de cobre recocido
Anschluss für Kupferohr mit Nitrilkopf

Code Code Артикул Cod Código Code	Size Taille Размер Dimensiune Medida Abmessung	EURO EURO EURO EURO EURO EURO	Pack Cond. Уп-ка Ambalaj Caja Verp.
361.10.00	Ø10	-	20
361.12.00	Ø12	-	20
361.14.00	Ø14	-	20
361.15.00	Ø15	-	20
361.16.00	Ø16	-	20
361.18.00	Ø18	-	20

Euroconus thread G 3/4" UNI-EN-ISO 228

029

217

Compression fitting for polyethylene pipe.

Brass ogive.
Nickel plated brass nut.
Nitrile seal ring.
Euroconus threaded connection F G3/4".

- Max operating pressure 95 °C
- Max operating pressure 1000 kPa

Polyethylene pipe fitting
Raccord pour tube polyéthylène
Фитинг для полиэтиленовых труб
Racord pentru conductă din polietilenă
Adaptador Euroconus para tubo de polietileno
Anschlüsse für Polyethylenrohr

Code Code Артикул Cod Código Code	Size Taille Размер Dimensiune Medida Abmessung	EURO EURO EURO EURO EURO EURO	Pack Cond. Уп-ка Ambalaj Caja Verp.
217.12.00	12x2	-	10
217.15.00	15x2	-	10
217.15.10	15x2,5	-	10
217.16.00	16x2	-	10
217.16.10	16x2,2	-	10
217.17.00	17x2	-	10
217.18.00	18x2	-	10
217.20.00	20x2	-	10
217.20.10	20x2,8	-	10
217.21.00	21x2,5	-	10

Euroconus thread G 3/4" UNI-EN-ISO 228
Size: Outside Ø x pipe thickness

029

029

123

Compression fitting for polyethylene pipe.

Brass ogive.
Nickel plated brass nut.
Nitrile seal ring.
Euroconus threaded connection F G3/4".

- Max operating pressure 95 °C
- Max operating pressure 1000 kPa

- ACS

CSTBat ACS

Polyethylene pipe fitting
Raccord pour tube polyéthylène
Фитинг для полиэтиленовых труб
Racord pentru conductă din polietilenă
Adaptador Euroconus para tubo de polietileno, con certificación CSTBat
Anschlüsse für Polyethylenrohr

Code Code Артикул Cod Código Code	Size Taille Размер Dimensiune Medida Abmessung	EURO EURO EURO EURO EURO EURO	Pack Cond. Уп-ка Ambalaj Caja Verp.
123.12.00	12x1,1	-	10
123.16.00	16x1,5	-	10
123.20.00	20x1,9	-	10

Euroconus thread G 3/4" UNI-EN-ISO 228
Size: Outside Ø x pipe thickness

029

224

Compression fitting for multilayer pipe.

Brass ogive.
Nickel plated brass nut.
Nitrile seal ring.
Euroconus threaded connection F G3/4".

Compatible with Q-tec copper pipe with matching sizes. Respect pipe flaring and gauging conditions.

- Max operating pressure 95 °C
- Max operating pressure 1000 kPa

- CSTBat (ø 14x2 - 16x2 - 20x2)

CSTBat ACS

Multilayer pipe fitting
Raccord pour tube polyéthylène multicouche
Фитинг для металлопластиковых труб
Racord pentru conductă din polietilenă multistrat
Adaptador Euroconus para tubo multicapa
Anschluss für mehrschichtige Polyethylenrohr

Code Code Артикул Cod Código Code	Size Taille Размер Dimensiune Medida Abmessung	EURO EURO EURO EURO EURO EURO	Pack Cond. Уп-ка Ambalaj Caja Verp.
224.14.00	14x2	-	10
224.16.00	16x2	-	10
224.16.10	16,2x2,6	-	10
224.16.20	16x2,25	-	10
224.17.00	17x2	-	10
224.18.00	18x2	-	10
224.20.00	20x2	-	10
224.20.30	20x2,25	-	10
224.20.10	20x2,5	-	10
224.20.20	20x2,9	-	10

Euroconus thread G 3/4" UNI-EN-ISO 228
Size: Outside Ø x pipe thickness

032

963

Press fitting for multilayer pipe.

Nickel plated brass body
EPDM seals
Stainless steel pipe clamping bush
Dielectric pipe clamp cover in PE

- Max operating pressure 95 °C
- Max operating pressure 1000 kPa

ACS

Press fitting for multilayer pipe
Raccord à presser pour tube polyéthylène multicouche
Пресс-фитинг для металлопластиковых труб
Racord cu presare pentru conductă din polietilenă multistrat
Racor Press Fitting recto con tuerca loca para conexión Euroconus, para tubo multicapa
Steckanschluss für mehrschichtige Polyethylenrohr

Code Code Артикул Cod Código Code	Size A Dim. A Раз. A Dimens. A Med. A Abm. A	Size B Dim. B Раз.B Dimens. B Med. B Abm. B	EURO EURO EURO EURO EURO EURO	Pack Cond. Уп-ка Ambalaj Caja Verp.
963.16.30	16x2	Euroconus	-	10
963.18.30	18x2	Euroconus	-	10
963.20.30	20x2	Euroconus	-	10
963.26.30	26x3	Euroconus	-	10

Euroconus thread G 3/4" UNI-EN-ISO 228
Size A: Outside Ø x pipe thickness

Multi-clamp fitting.

040

222

In-line fitting for copper, polyethylene and multilayer pipe joint.

Nickel plated brass body
Euroconus threaded connections
M G3/4" Euroconus
M 1/2" UNI-EN-ISO 228

- Max operating pressure 110 °C
- Max operating pressure 1000 kPa

ACS

Straight fitting
Raccord droit
Прямой фитинг
Racord drept
Manguito para adaptadores Euroconus
Gerader Anschluss

Code Code Артикул Cod Código Code	Size A Dimension A Размер A Dimensiunea A Medida A Abmessung A	Size B Dimension B Размер B Dimensiunea B Medida B Abmessung B	EURO EURO EURO EURO EURO EURO	Pack Cond. Уп-ка Ambalaj Caja Verp.
222.05.10	Euroconus	Euroconus	-	30
222.05.00	G 1/2"	Euroconus	-	30

Euroconus G 3/4" UNI-EN-ISO 228

100% MADE IN ITALY

311

Y-shaped fitting to split copper, polyethylene and multilayer circuits.

Nickel plated brass body
Nitrile seals
Euroconus rotary threaded connection F G3/4"
Standard RBM split threaded connections W24.5x19F.

- Max operating pressure 100 °C
- Max operating pressure 1000 kPa

Y-shaped fitting
Raccord en Y
Фитинг У-образный
Racord în formă de Y
Racor en "Y" para desdoblar una conexión Euroconus
Y-Anschluss

Code Code Артикул Cod Código Code	Size A Dimension A Размер A Dimensiunea A Medida A Abmessung A	Size B Dimension B Размер B Dimensiunea B Medida B Abmessung B	EURO EURO EURO EURO EURO EURO	Pack Cond. Уп-ка Ambalaj Caja Verp.
311.05.00	Euroconus	RBM	-	10

Euroconus thread G 3/4" UNI-EN-ISO 228
Standard RBM thread W 24.5x19 F

037

Allows to split circuits deriving from Euroconus manifolds

92

Reduction for copper or polyethylene fitting

Nickel plated brass body.
Threaded connection M W28x19F
Euroconus threaded connection F G3/4".

- Max operating pressure 110 °C
- Max operating pressure 1000 kPa

Reduction for copper or polyethylene pipe
Réduction pour tube cuivre ou polyéthylène
Переходник для медных или полиэтиленовых труб
Reducție pentru conducta din cupru sau polietilenă
Reducción Euroconus 3/4 Hembra W28x19F - Macho Withworth
Reduzierer für Kupfer- oder Polyätylenrohr

Code Code Артикул Cod Código Code	Size Taille Размер Dimensiune Medida Abmessung	EURO EURO EURO EURO EURO EURO	Pack Cond. Уп-ка Ambalaj Caja Verp.
92.05.00	3/4"	-	10

Withworth thread W28x19F
Euroconus thread G 3/4" UNI-EN-ISO 228

040

For high flow rates.

Allows to connect copper pipes ø 22 for fittings W28x19F code 116.22.00

42

Blind side cap for manifold ways.

Nickel plated brass body.
PTFE seal.
Threaded F standard RBM connection.

- Max operating pressure 110 °C
- Max operating pressure 1000 kPa

Blind side cap
Bouchon latéral borgne
Глухая боковая заглушка
Dop lateral orb
Tapón Hembra para conexión Standard RBM
Seitliche Blindkappe

Code Code Артикул Cod Código Code	Size Taille Размер Dimensiune Medida Abmessung	EURO EURO EURO EURO EURO EURO	Pack Cond. Уп-ка Ambalaj Caja Verp.
42.00.00	RBM	-	10

Standard RBM thread W 24.5x19 F

040

240

Blind side cap for manifold ways.

Nickel plated brass body.
PTFE seal.
Euroconus threaded connection F G3/4".

- Max operating pressure 110 °C
- Max operating pressure 1000 kPa

Blind side cap
Bouchon latéral borgne
Глухая боковая заглушка
Buşon lateral orb
Tapón Hembra para conexión Euroconus
Seitliche Blindkappe

Code Code Артикул Cod Código Code	Size Taille Размер Dimensiune Medida Abmessung	EURO EURO EURO EURO EURO EURO	Pack Cond. Уп-ка Ambalaj Caja Verp.
240.05.00	3/4"	-	10

Euroconus thread G 3/4" UNI-EN-ISO 228

040

2944

Blind cap for fittings with standard RBM threaded connection.

Brass body.
Standard RBM threaded M connection.

- Max operating pressure 110 °C
- Max operating pressure 1000 kPa

Blind cap for RBM fittings
Bouchon borgne pour raccords RBM
Глухая заглушка для фитингов rbm
Buşon orb pentru racorduri rbm
Tapón Macho para conexión Standard RBM
Blindkappe für Anschlüsse Rbm

Code Code Артикул Cod Código Code	Size Taille Размер Dimensiune Medida Abmessung	EURO EURO EURO EURO EURO EURO	Pack Cond. Уп-ка Ambalaj Caja Verp.
2944.004	RBM	-	1

Standard RBM thread W 24.5 x 19 F

040

Blind terminal for testing system

242

Blind side cap for manifold ways.

Brass body.
Nitrile seal.
Threaded connection M UNI-EN-ISO 228.

- Max operating pressure 110 °C
- Max operating pressure 1000 kPa

Blind side cap
Bouchon latéral borgne
Глухая боковая заглушка
Dop lateral orb
Tapón Macho para conexión rosca gas
Seitliche Blindkappe

Code Code Артикул Cod Código Code	Size Taille Размер Dimensiune Medida Abmessung	EURO EURO EURO EURO EURO EURO	Pack Cond. Уп-ка Ambalaj Caja Verp.
242.04.00	1/2"	-	10

040

Used for collectors with female G 1/2" side connections

57

Reduction for RBM connection.

Nickel plated brass body.
PTFE seal.
Threaded MF standard RBM connection.

- Max operating pressure 110 °C
- Max operating pressure 1000 kPa

Reduction
Réduction
Переходник
Reducţie
Reducción Standard RBM - Standard RBM
Reduzierstück

Code Code Артикул Cod Código Code	Size Taille Размер Dimensiune Medida Abmessung	EURO EURO EURO EURO EURO EURO	Pack Cond. Уп-ка Ambalaj Caja Verp.
57.16.00*	RBM	-	10
57.18.00**	RBM	-	10

*Lengthen the standard RBM connection by 10 mm
**Makes it possible to use Ø18 copper pipes

040

43

Fitting for side connection of manifold valve.

Nickel plated brass body.
PTFE seal.
Threaded F standard RBM connection F UNI-EN-ISO 228.

- Max operating pressure 110 °C
- Max operating pressure 1000 kPa

Fitting for side connection of manifold valve.
Raccord pour branchement latéral de la vanne au collecteur
Фитинг для бокового соединения клапана с коллектором
Racord pentru conectarea laterală a supapei la colector
Racor Hembra Standard RBM – Hembra rosca Gas
Anschluss für die seitliche Verbindung des Ventils an den Sammler

Code Code Артикул Cod Código Code	Size Taille Размер Dimensiune Medida Abmessung	EURO EURO EURO EURO EURO EURO	Pack Cond. Уп-ка Ambalaj Caja Verp.
43.03.00	3/8"	-	10
43.04.00	1/2"	-	10

Standard RBM thread W 24.5x19 F

040

100% MADE IN ITALY

597

Reduction for RBM connection.

Nickel plated brass body.
PTFE seal.

- Max operating pressure 110 °C
- Max operating pressure 1000 kPa

040

Reduction for RBM connection
Réduction pour branchement RBM
Переходник для фитинга RBM
Reducție pentru prindere RBM
Racor Hembra Standard RBM – Macho Withworth W28x19F
Reduzierstück für Anschluss RBM

Code Code Артикул Cod Código Code	Size Taille Размер Dimensiune Medida Abmessung	EURO EURO EURO EURO EURO EURO	Pack Cond. Уп-ка Ambalaj Caja Verp.
597.00.00	RBM	-	10

Standard RBM thread W 24.5x19 F
Withworth thread W 28x19 F

For connections to standard RBM fitting connection code 116.XX.XX

45

Pipe connection nipple.

Nickel plated brass body.
Threaded connections MF UNI-EN-ISO 228.

- Max operating pressure 110 °C
- Max operating pressure 1000 kPa

040

Connection nipple
Mamelon de raccordement
Соединительный ниппель
Nipluri de racordare
Niple Macho-Hembra rosca Gas
Verbindungsnippel

Code Code Артикул Cod Código Code	Size Taille Размер Dimensiune Medida Abmessung	EURO EURO EURO EURO EURO EURO	Pack Cond. Уп-ка Ambalaj Caja Verp.
45.05.00	3/4"	-	10
45.06.00	1"	-	10

42

Blind head cap for manifolds.

Nickel plated brass body.
PTFE seal.
Threaded connection F UNI-EN-ISO 228.

- Max operating pressure 110 °C
- Max operating pressure 1000 kPa

040

Blind head cap
Bouchon de tête borgne
Глухая заглушка
Buşon de cap orb
Tapón Hembra conexión rosca Gas
Kappe mit Blindkopf

Code Code Артикул Cod Código Code	Size Taille Размер Dimensiune Medida Abmessung	EURO EURO EURO EURO EURO EURO	Pack Cond. Уп-ка Ambalaj Caja Verp.
42.05.00	3/4"	-	10
42.06.00	1"	-	10

42

Perforated head cap for manifolds.

Nickel plated brass body.
PTFE seal.
Connection to manifold F UNI-EN-ISO 228
Head connection F 3/8" UNI-EN-ISO 228.

- Max operating pressure 110 °C
- Max operating pressure 1000 kPa

040

Perforated head cap
Bouchon de tête percé
Заглушка с отверстием
Buşon de cap găurit
Reducción Hembra-Hembra rosca Gas
Kappe mit gelochtem Kopf

Code Code Артикул Cod Código Code	Size Taille Размер Dimensiune Medida Abmessung	EURO EURO EURO EURO EURO EURO	Pack Cond. Уп-ка Ambalaj Caja Verp.
42.05.30	3/4"	-	10
42.06.30	1"	-	10

43

Head connection for manifolds with copper or polyethylene fitting connection.

Nickel plated brass body.
PTFE seal.
Threaded connections
- M standard RBM
- F UNI-EN-ISO 228.

- Max operating pressure 110 °C
- Max operating pressure 1000 kPa

040

Head connection for copper or polyethylene fitting
Branchement de tête pour raccord cuivre ou polyéthylène
Переходник для присоединения фитинга для полиэтиленовых и медных труб
Prindere de cap pentru racord din cupru sau polietilenă
Racor Macho Standard RBM – Hembra rosca Gas
Kopfbefestigung für Kupfer- oder Polyethylenanschluss

Code Code Артикул Cod Código Code	Size Taille Размер Dimensiune Medida Abmessung	EURO EURO EURO EURO EURO EURO	Pack Cond. Уп-ка Ambalaj Caja Verp.
43.05.00	3/4"	-	10
43.06.00	1"	-	10

Standard RBM thread W 24.5x19 F

100% MADE IN ITALY

040

56

Blind head cap for manifolds.

Nickel plated brass body.
PTFE seal.
Threaded connection M UNI-EN-ISO 228.

- Max operating pressure 110 °C
- Max operating pressure 1000 kPa

Blind head cap
Bouchon de tête borgne
Глухая заглушка
Buşon de cap orb
Tapón Macho para conexión rosca Gas
Kappe mit Blindkopf

Code Code Артикул Cod Código Code	Size Taille Размер Dimensiune Medida Abmessung	EURO EURO EURO EURO EURO EURO	Pack Cond. Уп-ка Ambalaj Caja Verp.
56.05.00	3/4"	-	10
56.06.00	1"	-	10
56.07.00	1"1/4	-	10

040

56

Perforated head cap for manifolds.

Nickel plated brass body.
PTFE seal.
Connection to manifold M UNI-EN-ISO 228
Head connection F 3/8" UNI-EN-ISO 228

- Max operating pressure 110 °C
- Max operating pressure 1000 kPa

Perforated head cap
Bouchon de tête percé
Заглушка с отверстием
Buşon de cap găurit
Reducción Macho - 3/8" Hembra rosca Gas
Kappe mit gelochtem Kopf

Code Code Артикул Cod Código Code	Size Taille Размер Dimensiune Medida Abmessung	EURO EURO EURO EURO EURO EURO	Pack Cond. Уп-ка Ambalaj Caja Verp.
56.05.30	3/4"	-	10
56.06.30	1"	-	10

040

57

Head connection for manifolds with copper or polyethylene fitting connection.

Nickel plated brass body.
PTFE seal.
Threaded connections
M standard RBM
M UNI-EN-ISO 228.

- Max operating pressure 110 °C
- Max operating pressure 1000 kPa

Head connection for copper or polyethylene fitting
Branchement de tête pour raccord tube cuivre ou polyéthylène
Переходник для присоединения фитинга для полиэтиленовых и медных труб
Prindere de cap pentru racord conductă din cupru sau polietilenă
Racor Macho Standard RBM – Macho rosca Gas
Kopfbefestigung für Kupfer- oder Polyethylenanschluss

Code Code Артикул Cod Código Code	Size Taille Размер Dimensiune Medida Abmessung	EURO EURO EURO EURO EURO EURO	Pack Cond. Уп-ка Ambalaj Caja Verp.
57.05.00	3/4"	-	10
57.06.00	1"	-	10

Standard RBM thread W 24.5x19 F

040

178

Copper pipe adapter.

Nickel plated brass body.
Seals in ethylene-propylene elastomer and nitrile elastomer.
Threaded connection F UNI-EN-ISO 228

- Max temperature 110°C
- Max operating pressure 1000 KPa

Copper pipe adapter
Adaptateur a serré pour tube cuivre
Адаптер обжимной для медных труб
Adaptor pentru teava de cupru
Racor Transformador de conexión, con adaptador para tubo de cobre
Adapter für Kupferrohr

Code Code Артикул Cod Código Code	Size A Dimension A Размер A Dimensiunea A Medida A Abmessung A	Size B Dimension B Размер B Dimensiunea B Medida B Abmessung B	EURO EURO EURO EURO EURO EURO	Pack Cond. Уп-ка Ambalaj Caja Verp.
178.04.00	1/2"	Ø15	-	10
178.05.00	3/4"	Ø22	-	10
178.06.00	1"	Ø28	-	10

041

2441

Fastening spanner for adapters.

Fastening spanner for adapters
Clé de serrage pour adaptateur
Ключ закрытия для адаптера
Cheie de strangere pentru adaptori
Llave hexagonal para enlaces de válvulas de radiador y detentores
Adapterschlüssel

Code Code Артикул Cod Código Code	Size Taille Размер Dimensiune Medida Abmessung	EURO EURO EURO EURO EURO EURO	Pack Cond. Уп-ка Ambalaj Caja Verp.
2441.005	Ø 15 - 22 - 28	-	1

For use with fitting 178.XX.00

100% MADE IN ITALY

1401

Compression fitting for copper pipe.

Nickel plated brass body.
NBR seals.
Standard RBM threaded F connection.

- Max temperature 110°C
- Max operating pressure 1000 kPa

Copper pipe fitting
Raccord pour tube cuivre
Фитинг для медных труб
Racord pentru conductă de cupru
Adaptador Standard RBM para tubo de cobre recocido
Anschluss für Kupferrohr

Code Code Артикул Cod Código Code	Size Taille Размер Dimensiune Medida Abmessung	EURO EURO EURO EURO EURO EURO	Pack Cond. Уп-ка Ambalaj Caja Verp.
1401.10.00	Ø 10	-	10
1401.12.00	Ø 12	-	10
1401.14.00	Ø 14	-	10
1401.15.00	Ø 15	-	10
1401.16.00	Ø 16	-	10

Standard RBM thread W24.5x19F

029

jet-line

139

Compression fitting for copper pipe.

Nickel plated brass body.
NBR seals.
Threaded connection F G1/2"

- Max temperature 110°C
- Max operating pressure 1000 kPa

Copper pipe fitting
Raccord pour tube cuivre
Фитинг для медных труб
Racord pentru conductă din cupru
Adaptador G1/2" base cónica para tubo de cobre recocido
Anschluss für Kupferrohr

Code Code Артикул Cod Código Code	Size Taille Размер Dimensiune Medida Abmessung	EURO EURO EURO EURO EURO EURO	Pack Cond. Уп-ка Ambalaj Caja Verp.
139.10.50	Ø 10 *	-	10
139.12.50	Ø 12 *	-	10
139.14.50	Ø 14 *	-	10
139.15.50	Ø 15 *	-	10

* Thread F G 1/2"

- ACS

029

jet-line

Tapered seat.

735

Compression fitting for polyethylene pipe, flat seat.

Nickel plated brass body.
NBR seals.
Threaded connection F G1/2"

- Max temperature 110°C
- Max operating pressure 1000 kPa

Fitting for polyethylene pipe, flat seat
Raccord pour tube polyéthylène siège plat
Фитинг для полиэтиленовых труб плоское седло
Racord pentru conductă din polietilenă locaș plat
Adaptador G1/2" base plana para tubo en polietileno
Anschluss für Polyethylenrohr flacher Sitz

Code Code Артикул Cod Código Code	Size Taille Размер Dimensiune Medida Abmessung	EURO EURO EURO EURO EURO EURO	Pack Cond. Уп-ка Ambalaj Caja Verp.
735.12.00	12x1,1	-	10
735.16.00	16x1,5	-	10
735.16.10*	16x2	-	10

*Can also be used for multilayer polyethylene pipe
Thread F G 1/2"

- CSTBat (ø 12x1,1 - 16x1,5)

029

jet-line

Flat seat.

735

Compression fitting for multilayer polyethylene pipe, tapered seat.

Nickel plated brass body.
NBR seals.
Threaded connection F G1/2"

- Max temperature 110°C
- Max operating pressure 1000 kPa

Compression fitting for multilayer polyethylene pipe, tapered seat
Raccord pour tube polyéthylène multicouche siège conique
Фитинг для металлопластиковых труб коническое седло
Racord pentru conductă din polietilenă multistrat locaș conic
Adaptador G1/2" base cónica para tubo multicapa
Anschluss für mehrschichtiges Polyethylenrohr konischer Sitz

Code Code Артикул Cod Código Code	Size Taille Размер Dimensiune Medida Abmessung	EURO EURO EURO EURO EURO EURO	Pack Cond. Уп-ка Ambalaj Caja Verp.
735.16.20	16x2	-	10

Thread F G 1/2"

029

jet-line

Tapered seat.

100% MADE IN ITALY

140

Blind side cap.

Nickel plated brass body.
PTFE seals.
Threaded connection F G1/2"

- Max temperature 110°C
- Max operating pressure 1000 kPa

Blind side cap
Bouchon latéral borgne
Боковая глухая заглушка
Buşon lateral orb
Tapón Hembra para conexión G1/2"
Seitliche Blindkappe

Code Code Артикул Cod Código Code	EURO EURO EURO EURO EURO EURO	Pack Cond. Уп-ка Ambalaj Caja Verp.
140.04.00	-	10

Thread F G 1/2"

G ½"

- ACS

040

Flat seat.

586

Cap for lockshield valves (obturator valve part).

Nickel plated brass body
NBR seals

- Max temperature 110°C
- Max operating pressure 1000 kPa

Cap for lockshield valves
Bouchon pour détendeurs
Заглушка для настроечных клапанов
Buşon pentru acţionatoare
Capuchón para detentor, en latón
Kappe für Rücklaufverschraubung

Code Code Артикул Cod Código Code	EURO EURO EURO EURO EURO EURO	Pack Cond. Уп-ка Ambalaj Caja Verp.
586.00.00	-	10

- ACS

040

DIMENSIONAL DRAWINGS

DESSIN TECHNIQUES

ЧЕРТЕЖИ КОМПОНЕНТОВ

DESENE DIMENSIONALE

DISEÑOS Y DIMENSIONES

TECHNISCHE ZEICHNUNGEN

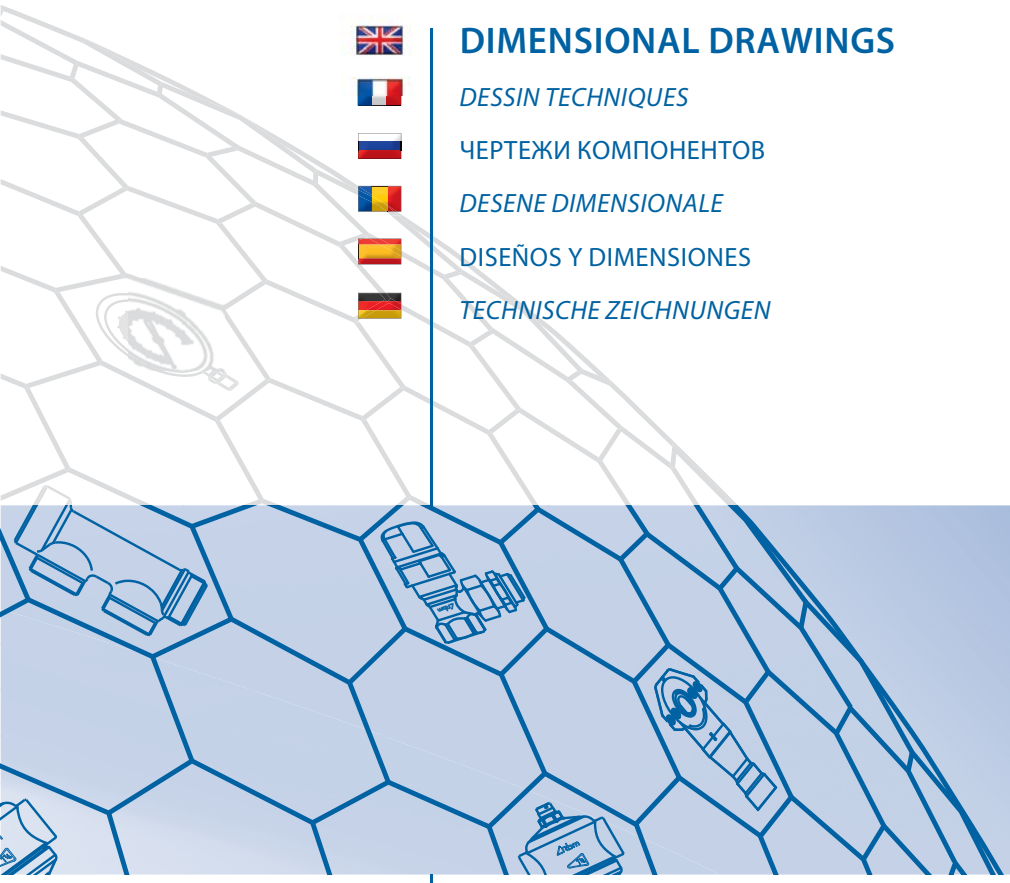

Dimensional drawings

DIMENSIONAL DRAWINGS

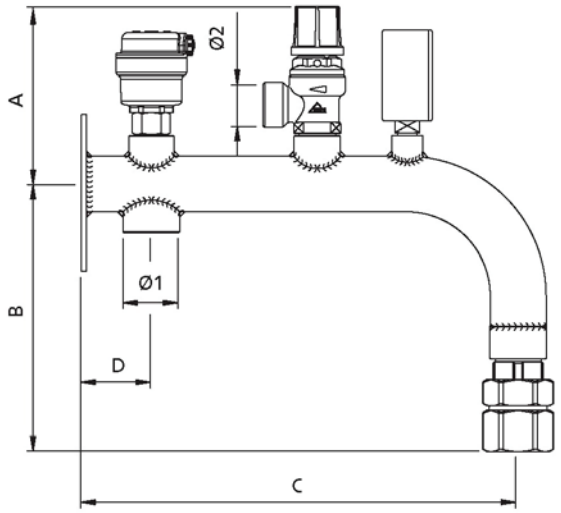

Code	Ø1	Ø2	A mm	B mm	C mm	D mm
578.05.00	G3/4″	G1/2″	102	153	250	40

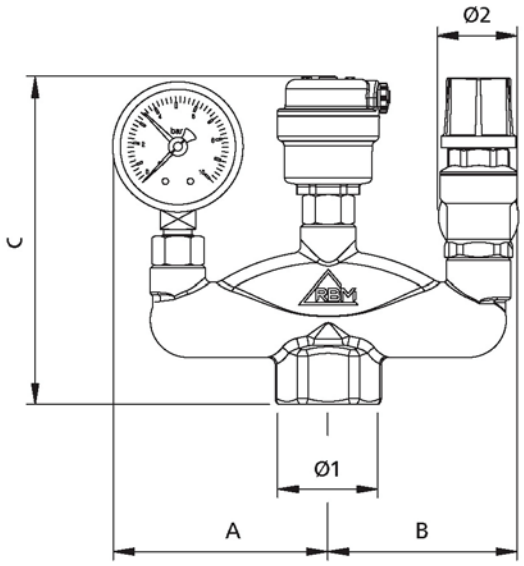

Code	Ø1	Ø2	A mm	B mm	C mm
47.06.10	G1″	G3/4″	86	76	130,5

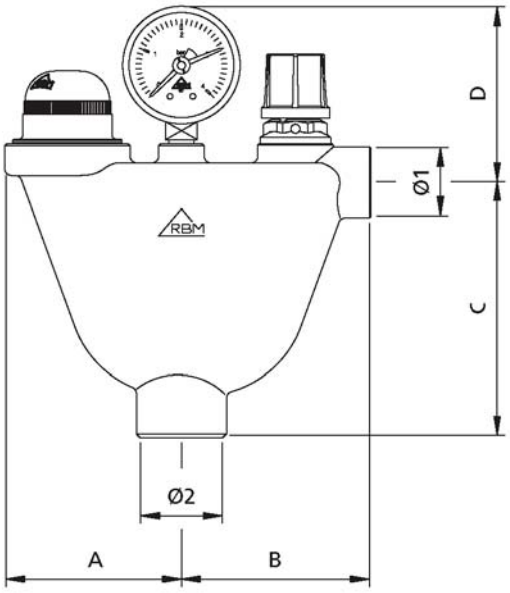

Code	Ø1	Ø2	A mm	B mm	C mm	D mm
47.06.40	G3/4″	G1″	77,5	83	112	77

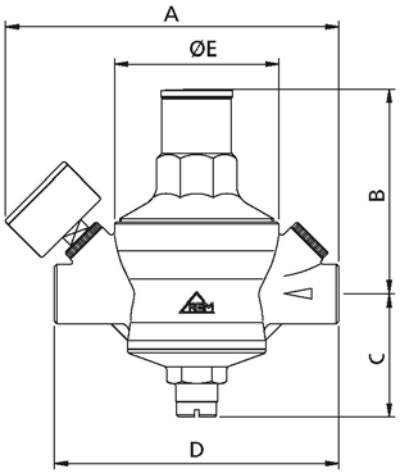

Code	Size	A mm	B mm	C mm	D mm	ØE mm
46.04.00	G1/2″	158,5	97	58,5	135	78

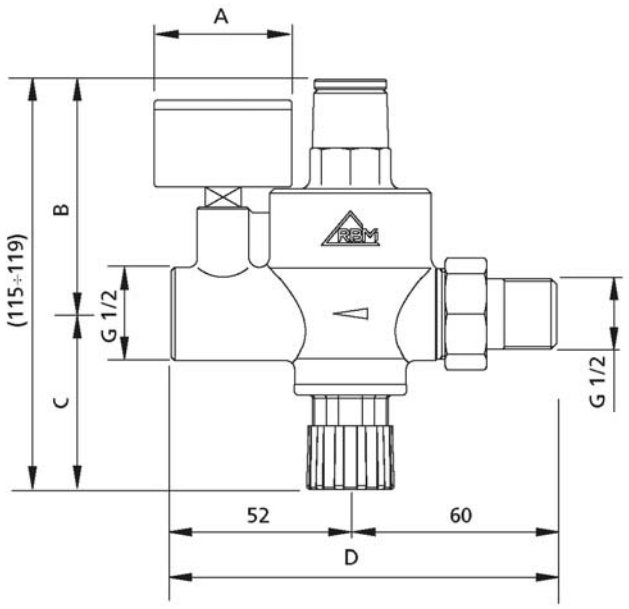

Code	Size	A mm	B mm	C mm	D mm
39.04.00	G1/2″	Ø 40	68	47÷51	112

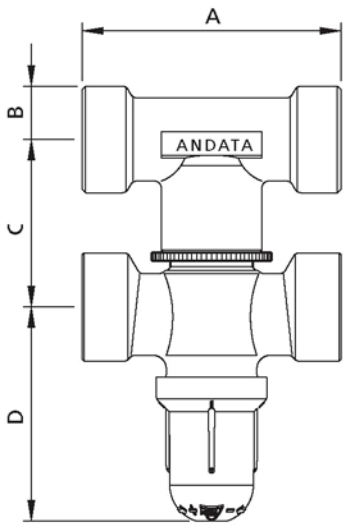

Code	Size	A mm	B mm	C mm	D mm
220.05.00	G3/4″	77	16	50÷55	64
220.06.00	G1″	81	19,5	50÷55	66

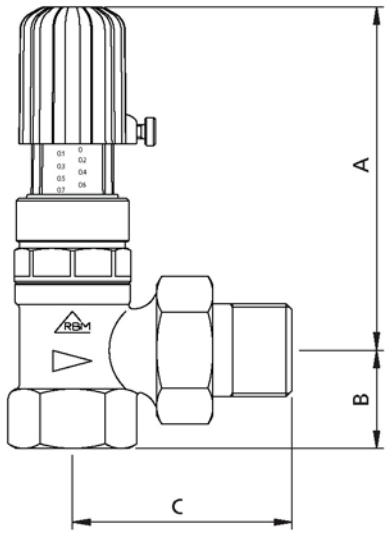

Code	Size	A mm	B mm	C mm
124.05.00	G3/4″	98	28	62,5
124.06.00	G1″	98	33,5	67,5
124.07.00	G1″1/4	133	39	81
124.22.00	ø 22	98	36	41

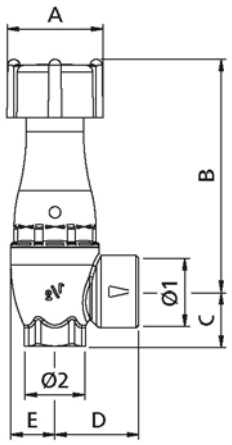

Code	Ø1	Ø2	A mm	B mm	C mm	D mm	E mm
605.04.X0	G3/4″	G1/2″	42	102	24	36,5	19,5
605.05.X0	G1″	G3/4″	42	140	29	46	27
605.06.X0	G1″1/4	G1″	56	157	34	55	31
605.07.X0	G1″1/2	G1″1/4	56	187	41	60	36

100% MADE IN ITALY

DIMENSIONAL DRAWINGS

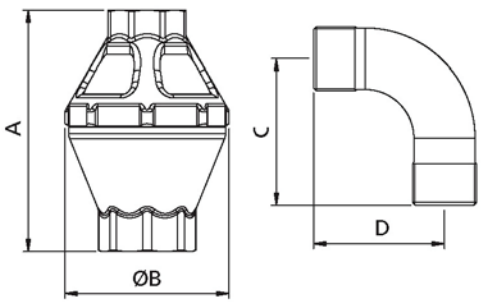

Code	Size	A mm	B mm	C mm	D mm
666.05.00	G3/4″	98,5	67	60	53,5
666.06.00	G1″	124	84,5	67,5	58
666.07.00	G1″1/4	147	99	75	58
666.08.00	G1″1/2	170	115	75	67

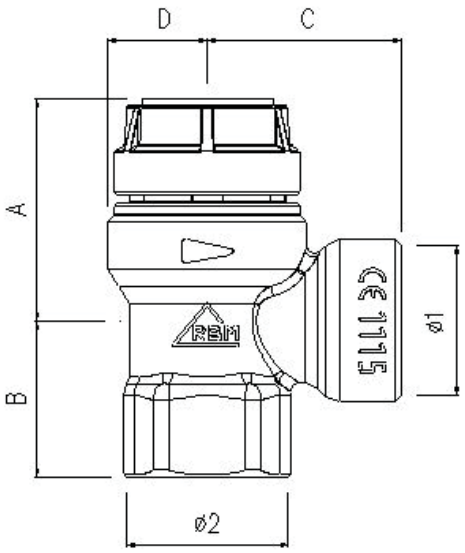

Code	Ø1	Ø2	A mm	B mm	C mm	D mm
351.04.XX	G1/2″	G1/2″	35,5	25	31	16
351.05.XX	G3/4″	G3/4″	35,5	28	34	16
352.04.XX	G1/2″	G1/2″M	35,5	27	31	16
352.05.XX	G3/4″	G1/2″M	35,5	29,7	33	15,5

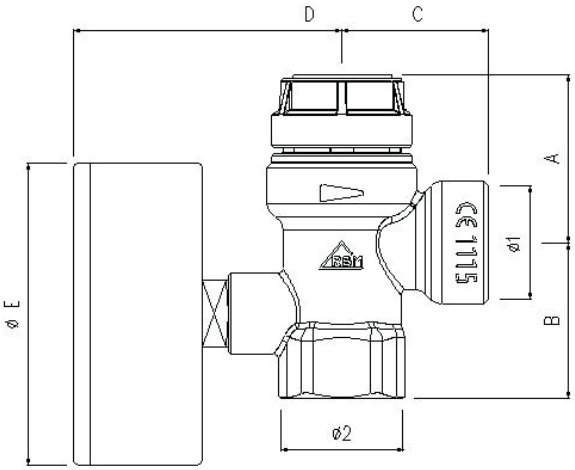

Code	Ø1	Ø2	A mm	B mm	C mm	D mm	ØE mm
353.04.XX	G1/2″	G1/2″	35,5	33	31	63,5	51,5
353.05.XX	G3/4″	G3/4″	35,5	40,5	34	63,5	51,5
354.04.XX	G1/2″	G1/2″M	35,5	35	31	63,5	51,5

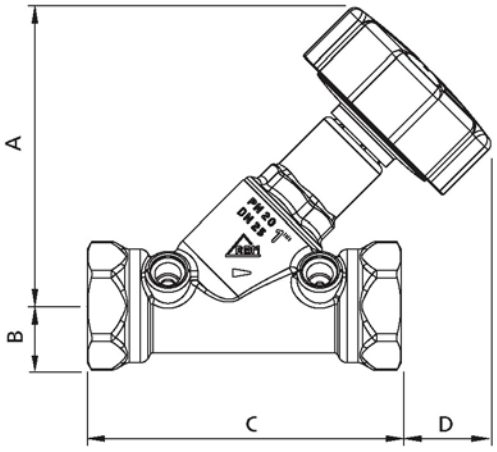

Code	Size	A mm	B mm	C mm	D mm
619.03.50	G3/8″	84,5	12	89	25
619.04.50	G1/2″	84	15	96	22
619.05.50	G3/4″	85,6	17,8	97	21,5
619.06.50	G1″	98	21,3	103,3	29,5
619.07.50	G1″1/4	101	28	111	29
619.08.50	G1″1/2	107	31	120	27
619.09.50	G2″	115	37	132	21,7

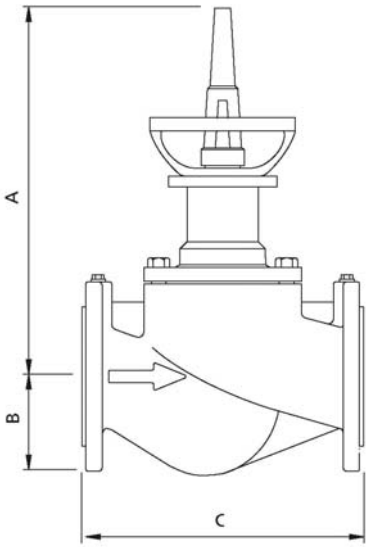

Code	Size	A mm	B mm	C mm
619.10.60	DN 65	365	92,5	290
619.11.60	DN 80	395	100	310
619.13.60	DN 100	430	110	350
619.14.60	DN 125	495	125	400
619.15.60	DN 150	530	142,5	480
619.17.60	DN 200	665	170	600
619.19.60	DN 250	600	202,5	730
619.21.60	DN 300	685	230	850

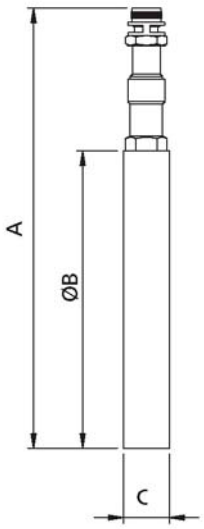

Code	Size	A mm	ØB mm	C mm
620.10.00	DN 65	191	129	20
620.11.00	DN 80	206	144	20
620.13.00	DN 100	226	164	20
620.14.00	DN 125	256	194	20
620.15.00	DN 150	282	220	20
620.17.00	DN 200	337	275	20
620.19.00	DN 250	393	331	20
620.21.00	DN 300	448	386	20

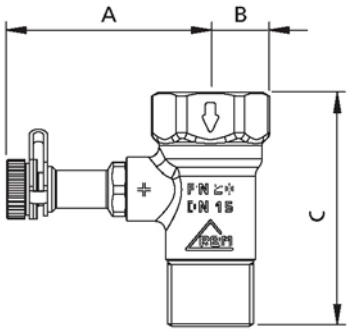

Code	Size	A mm	B mm	C mm
620.04.50	G1/2"	49,5	14,5	57
620.04.90	G1/2" LF	49,5	14,5	57
620.05.50	G3/4"	51,5	18	59
620.06.50	G1"	5,5	22,5	67,5
620.07.50	G1"1/4	60	28	72
620.08.50	G1"1/2	63	30,8	73,5
620.09.50	G2"	69	37,2	82

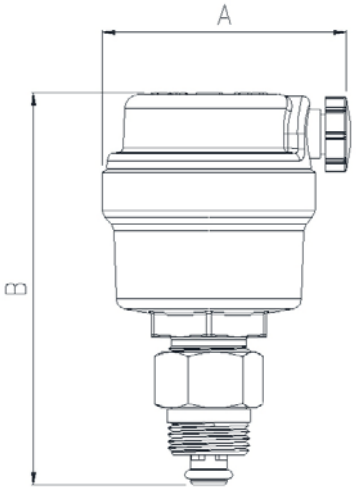

Code	Size	A mm	B mm
791.03.40	G3/8"	43,5	55,7
791.04.40	G1/2"	43,5	56,7

DIMENSIONAL DRAWINGS

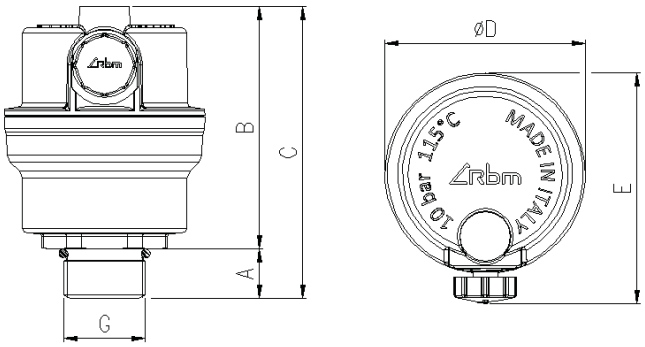

Code	Size	A mm	B mm	C mm	øD mm	E mm
2827.03.00	G 3/8"	10	48,8	58,8	40,4	46,3

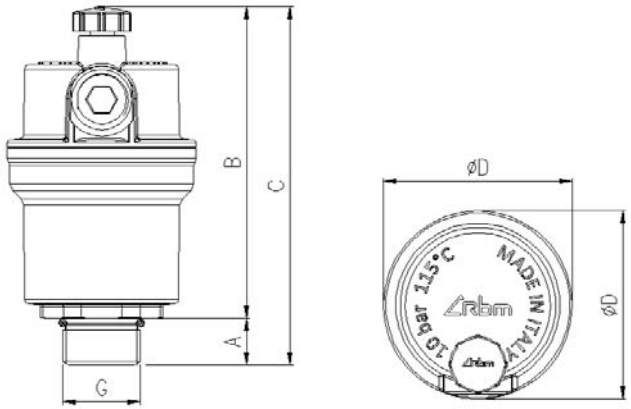

Code	Size	A mm	B mm	C mm	øD mm
2828.03.00	G 3/8"	10	66,9	76,9	40,4
2828.04.00	G 1/2"	11,5	66,9	78,4	40,4

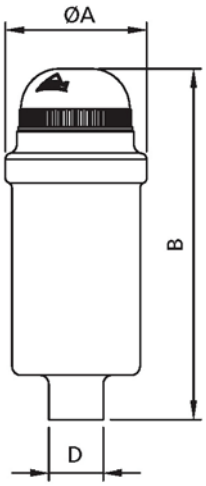

Code	Size D	ØA mm	B mm
37.03.60	G3/8"	47,8	109
37.04.60	G1/2"	47,8	112
37.05.60	G3/4"	47,8	114
37.06.60	G1"	47,8	115

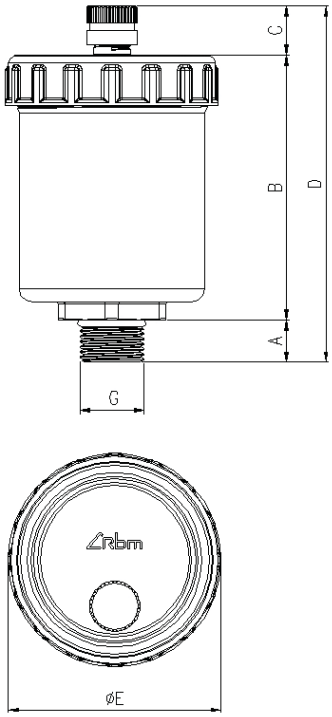

Code	Size	A mm	B mm	C mm	D mm	øE mm
2836.04.00	G 1/2"	11,5	86,4	12,7	110,6	55
2840.03.00	G 3/8"	11	68,4	12,7	92,1	55
2840.04.00	G 1/2"	11,5	68,4	12,7	92,6	55

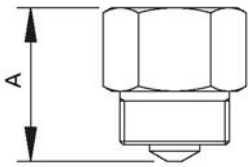

Code	Size	A mm
38.03.70	G3/8" F x G3/8"M	23,5
38.04.10	G1/2" F x G1/2"M	28
38.04.70	G3/8" F x G1/2"M	23,5

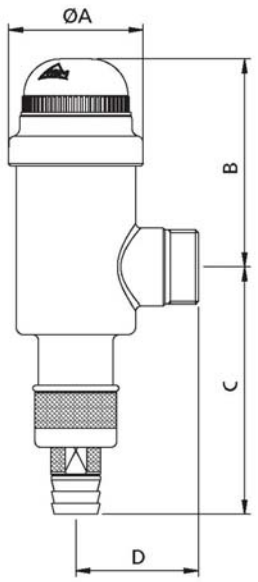

Code	Size	ØA mm	B mm	C mm	D mm
216.05.60	G3/4″	47,8	74	87,5	43,5
216.06.60	G1″	47,8	74	87,5	43,5
216.07.60	G1″1/4	47,8	74	87,5	46

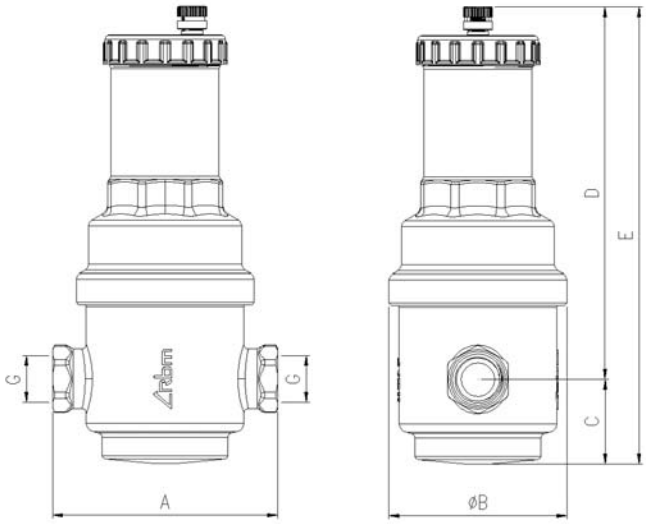

Code	Size	A mm	øB mm	C mm	D mm	E mm
2830.04.00	G 1/2″	100	79	37,5	165,5	203
2830.05.00	G 3/4″	105	79	37,5	165,5	203
2830.06.00	G 1″	110	79	37,5	165,5	203
2830.07.00	G 1″1/4	115	79	37,5	165,5	203
2830.08.00	G 1″1/2	120	88	47	171,5	218,5
2830.09.00	G 2″	125	88	47	171,5	218,5

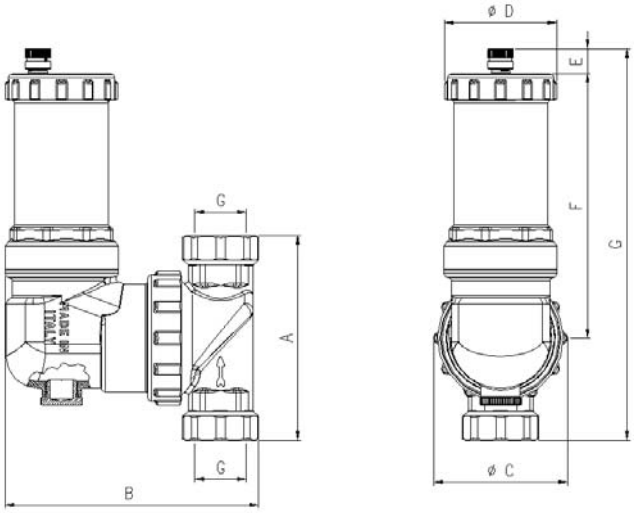

Code	Size	A mm	B mm	ø C mm	ø D mm	E mm	F mm	G mm
2649.05.00	G 3/4″	104	126,5	68,2	57,2	12,7	134,4	199÷200
2649.06.00	G 1″	104	126,5	68,2	57,2	12,7	134,4	199÷200

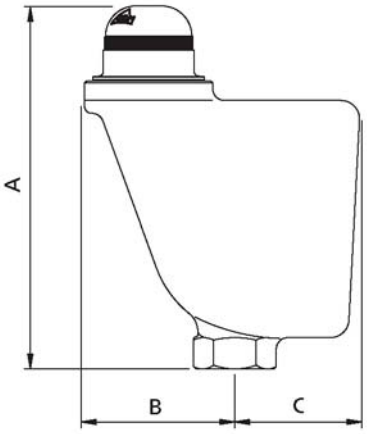

Code	Size	A mm	B mm	C mm
37.05.70	G3/4″	156	64,5	53,5

DIMENSIONAL DRAWINGS

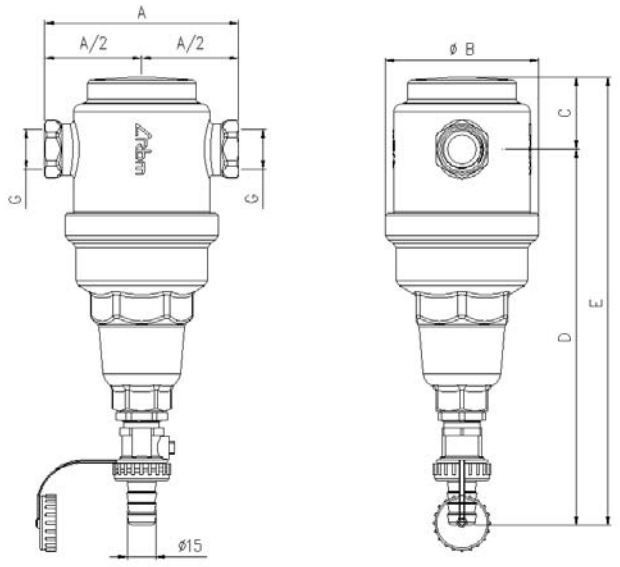

Code	Size	A mm	øB mm	C mm	D mm	E mm
2829.04.00	G 1/2"	100	79	37,5	194	231,5
2829.05.00	G 3/4"	105	79	37,5	194	231,5
2829.06.00	G 1"	110	79	37,5	194	231,5
2829.07.00	G 1"1/4	115	79	37,5	194	231,5
2829.08.00	G 1"1/2	120	88	47	201	248
2829.09.00	G 2"	125	88	47	201	248

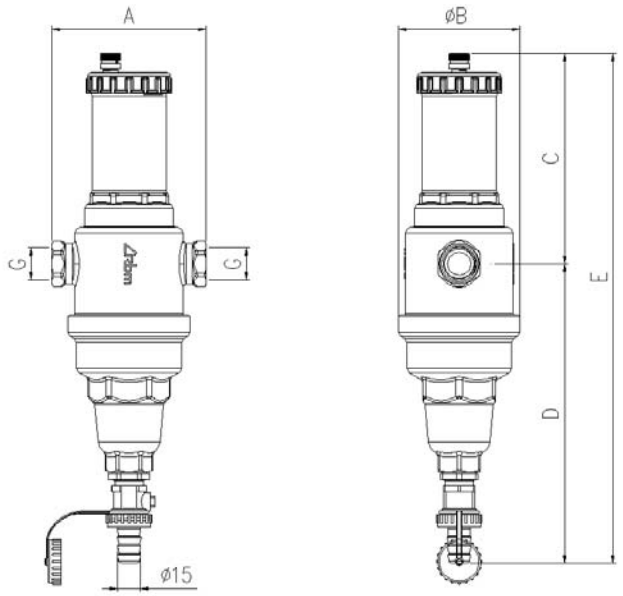

Code	Size	A mm	øB mm	C mm	D mm	E mm
2831.04.00	1/2"	100	79	136,5	194	330,5
2831.05.00	3/4"	105	79	136,5	194	330,5
2831.06.00	1"	110	79	136,5	194	330,5
2831.07.00	1"1/4	115	79	136,5	194	330,5

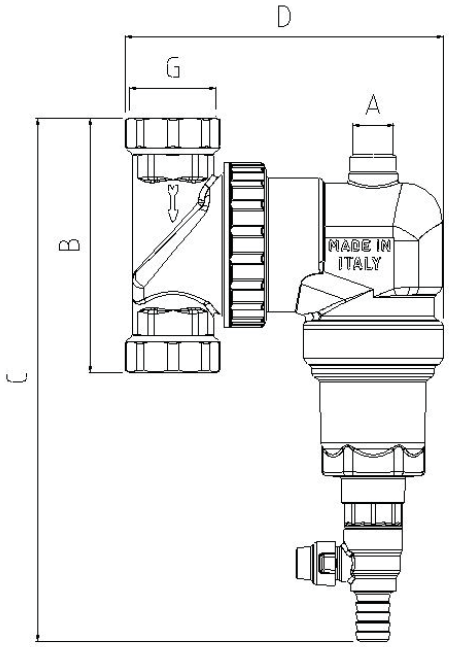

Code	Size	A	B mm	C mm	D mm
2098.05.00	G 3/4"	G 3/8"	104	214	127
2098.06.00	G 1"	G 3/8"	104	214	127

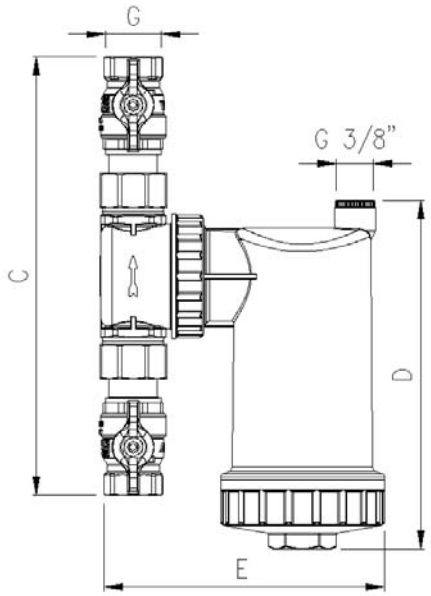

Code	Size	C mm	D mm	E mm
2319.05.50	G 3/4"	237	189	153
2319.06.50	G 1"	253	189	153
2344.05.50	G 3/4"	237	189	153
2344.06.50	G 1"	253	189	153

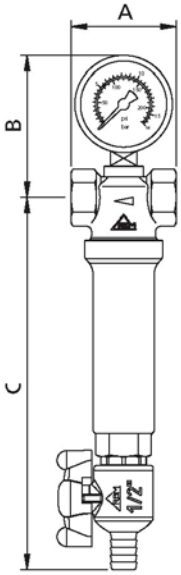

Code	Size	A mm	B mm	C mm
126.03.10	G3/8″	50	74	195,5
126.04.10	G1/2″	56	76	199
126.05.10	G3/4″	67	78	192
126.06.10	G1″	80	82	198
126.07.10	G1″1/4	92	86,5	229
126.08.10	G1″1/2	109	89,5	239
126.09.10	G2″	109	96	239
126.10.10	G2″1/2	180	124	466
126.11.10	G3″	188	124	466
126.13.10	G4″	202	124	466
2337.06.10	G1″	80	82	198
2337.07.10	G1″1/4	92	86,5	229
2337.08.10	G1″1/2	109	89,5	239
2337.09.10	G2″	109	96	239

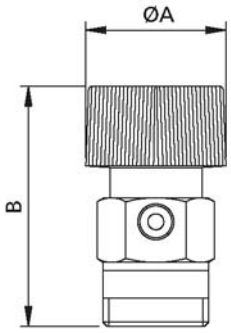

Code	Size	ØA mm	B mm
18.02.52	G1/4″	17,5	30
18.03.52	G3/8″	17,5	30

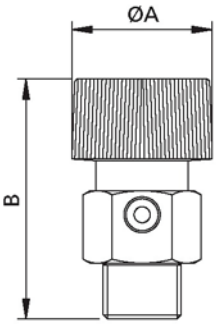

Code	Size	ØA mm	B mm
18.01.02	G1/8″	17,5	30
18.02.02	G1/4″	17,5	30
18.03.02	G3/8″	17,5	30

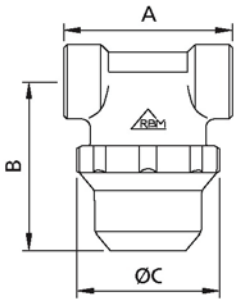

Code	Size	A mm	B mm	ØC mm
3.03.X0	G3/8″	50	50	42,5
3.04.X0	G1/2″	56	53	42,5
3.05.X0	G3/4″	67	51,5	48
3.06.X0	G1″	80	55,5	58,5
3.07.X0	G1″1/4	92	68,5	78,5
3.08.X0	G1″1/2	109	94	80,5
3.09.X0	G2″	109	94	80,5
3.10.X0	G2″1/2	180	192,5	186
3.11.X0	G3″	188	192,5	186
3.13.X0	G4″	202	192,5	186

DIMENSIONAL DRAWINGS

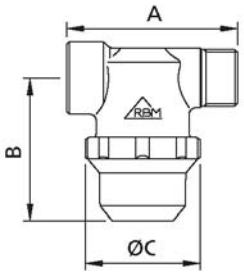

Code	Size	A mm	B mm	ØC mm
4.04.X0	G1/2″	63	53	42,5
4.05.X0	G3/4″	72	51,5	48
4.06.X0	G1″	87	55,5	58,5
4.07.X0	G1″1/4	97	68,5	78,5
4.08.X0	G1″1/2	114,5	94	80,5
4.09.X0	G2″	114,5	94	80,5

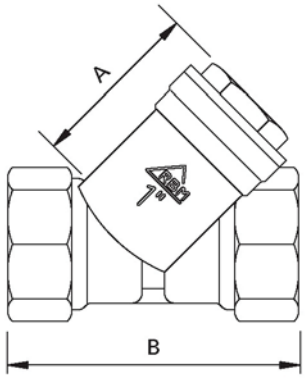

Code	Size	A mm	B mm
858.04.X2	G1/2″	44	57
858.05.X2	G3/4″	53	70
858.06.X2	G1″	56	78
858.07.X2	G1″1/4	70	97
858.08.X2	G1″1/2	80	106
858.09.X2	G2″	95	126

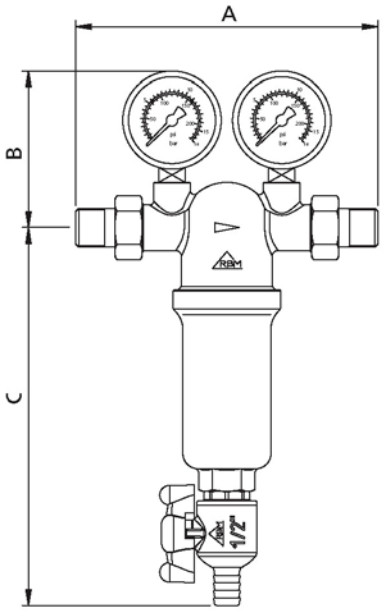

Code	Size	A mm	B mm	C mm
2516.04.00	G 1/2″	145	63	195,5
2516.05.00	G 3/4″	155	65,5	191,5
2516.06.00	G 1″	174	70	197
583.07.00	G 1″1/4	183	90	235

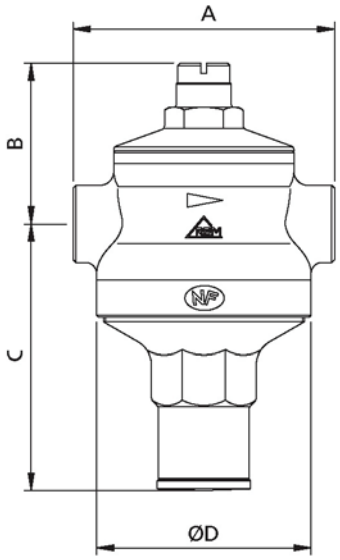

Code	Size	A mm	B mm	C mm	ØD mm
51.04.70	G1/2″	95	58,5	97	78
51.05.70	G3/4″	95	58,5	97	78
51.06.70	G1″	95	64,5	101,5	78
51.07.70	G1″1/4	116	68,5	165	92,5
51.08.70	G1″1/2	122	73	175	92,5
51.09.70	G2″	126	73	175	92,5
51.10.70	G2″1/2	180	103	274,5	186
51.11.70	G3″	188	103	274,5	186
51.13.70	G4″	202	103	274,5	186

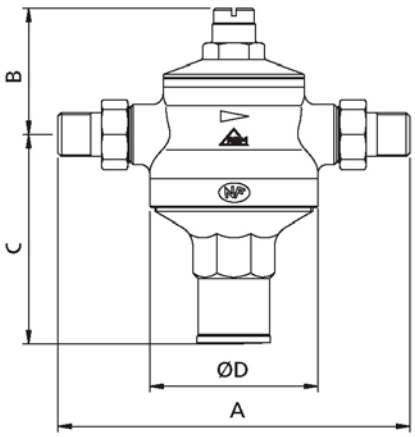

Code	Size	A mm	B mm	C mm	ØD mm
51.04.10	G1/2″	163	58,5	97	78
51.05.10	G3/4″	175	58,5	97	78
51.06.10	G1″	185,5	64,5	101,5	78
51.07.10	G1″1/4	216,5	68,5	165	92,5
51.08.10	G1″1/2	238,5	73	175	92,5
51.09.10	G2″	266	73	175	92,5

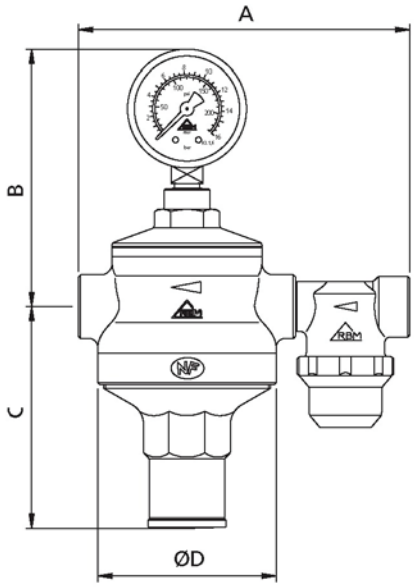

Code	Size	A mm	B mm	C mm	ØD mm
111.04.00	G1/2″	145	113	97	78
111.05.00	G3/4″	152,5	113	97	78
111.06.00	G1″	166	119	101,5	78
111.07.00	G1″1/4	197	123	165	92,5
111.08.00	G1″1/2	218,5	127,5	175	92,5
111.09.00	G2″	222,5	127,5	175	92,5

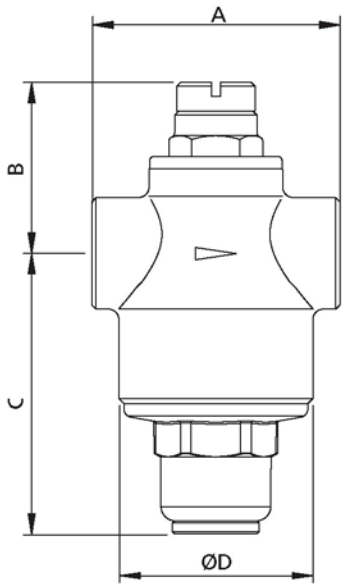

Code	Size	A mm	B mm	C mm	ØD mm
87.03.X0	G3/8″	60	41,5	67,5	47
87.04.X0	G1/2″	60	41,5	67,5	47
87.05.X0	G3/4″	60	41,5	67,5	47

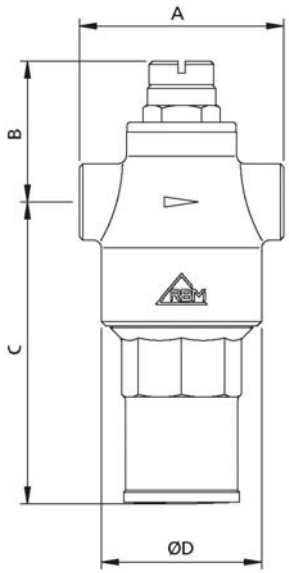

Code	Size	A mm	B mm	C mm	ØD mm
87.03.X0	G3/8″	60	41,5	89	47
87.04.X0	G1/2″	60	41,5	89	47
87.05.X0	G3/4″	60	41,5	89	47
87.06.X0	G1″	86	60,5	91,5	61
87.07.X0	G1″1/4	91	64,5	93	61
87.08.X0	G1″1/2	91	64,5	98	61
87.09.X0	G2″	91	69,5	101	61

DIMENSIONAL DRAWINGS

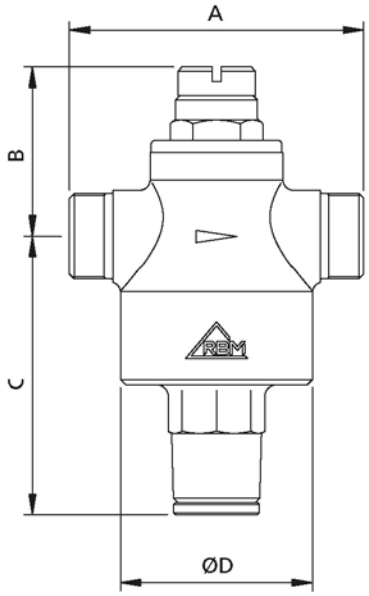

Code	Size	A mm	B mm	C mm	ØD mm
288.04.80	G1/2″	72	41,5	68,5	47
288.05.80	G3/4″	76	41,5	68,5	47

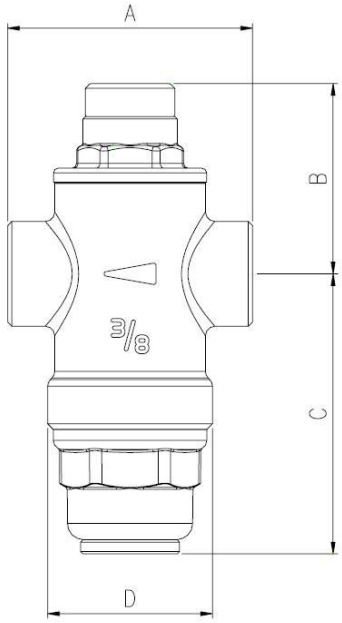

Code	Size	A mm	B mm	C mm	D mm
1139.03.00	G3/8″	52	40,5	59	32
1139.04.00	G1/2″	52	40,5	59	32
1139.05.00	G3/4″	52	40,5	59	32

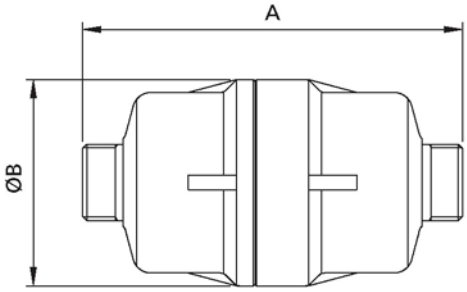

Code	Size	A mm	ØB mm
304.04.00	G1/2″	103	56
304.05.00	G3/4″	105	56
304.06.00	G1″	128	65
304.07.00	G1″1/4	141	79
304.08.00	G1″1/2	202	107
304.09.00	G2″	203	107
304.10.00	G2″1/2	225	235
304.11.00	G3″	239	235
304.13.00	G4″	251	235

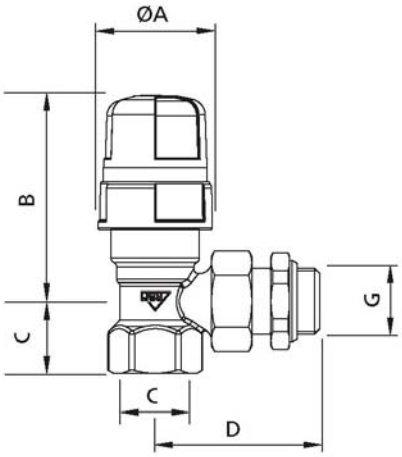

Code	Size G	ØA mm	B mm	C mm	D mm
31.03.00	G3/8″	35,5	66	19,5	50
31.04.00	G1/2″	35,5	66	22,5	51,5
31.05.00	G3/4″	35,5	66	28	62,5

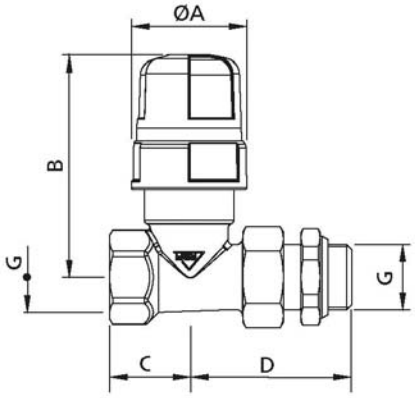

Code	Size G	ØA mm	B mm	C mm	D mm
32.03.00	G3/8″	35,5	70	22,5	48,5
32.04.00	G1/2″	35,5	70	24,5	50
32.05.00	G3/4″	35,5	70	31,5	58,5

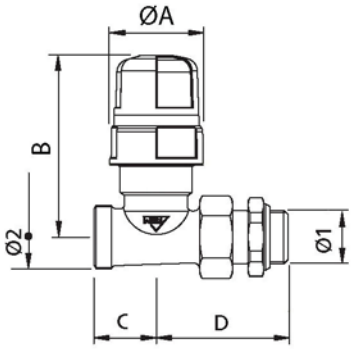

Code	Ø1	Ø2	ØA mm	B mm	C mm	D mm
49.03.00	G3/8″	standard RBM	35,5	70	23,5	48,5
49.04.00	G1/2″	standard RBM	35,5	70	23,5	50

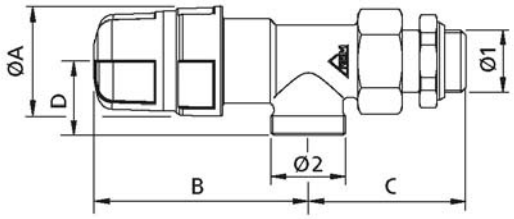

Code	Ø1	Ø2	ØA mm	B mm	C mm	D mm
180.03.00	G3/8″	standard RBM	35,5	69,5	49	24
180.04.00	G1/2″	standard RBM	35,5	69,5	52,5	24

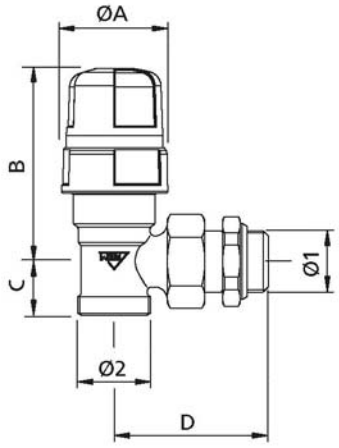

Code	Ø1	Ø2	ØA mm	B mm	C mm	D mm
48.03.00	G3/8″	standard RBM	35,5	66	18	50
48.04.00	G1/2″	Standard RBM	35,5	66	18	51,5

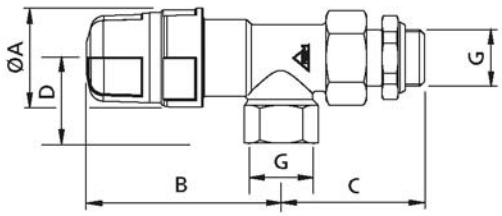

Code	Size G	A mm	B mm	ØC mm	D mm
179.03.00	G3/8″	35,5	70,5	47,5	29
179.04.00	G1/2″	35,5	70,5	51,5	30,5

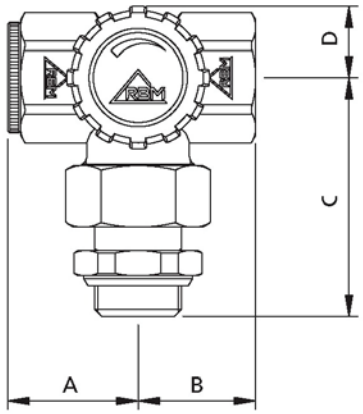

Code	Size	A mm	B mm	C mm	D mm
395.03.00	G3/8″	28,5	24,5	49,5	14
395.04.00	G1/2″	30,5	27,5	54,5	15

DIMENSIONAL DRAWINGS

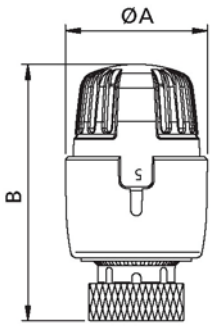

Code	ØA mm	B mm
2633.00.00	47	81÷86
590.00.X0	47	81÷86
720.00.30	47	82,5÷87,5

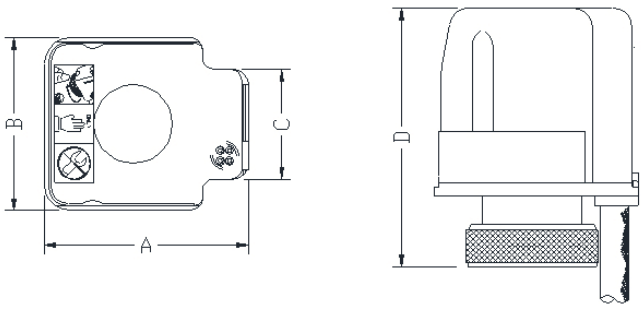

Code	A mm	B mm	C mm	D mm
2944.00.X2	52	44	28	60
306.00.X2	52	44	28	60

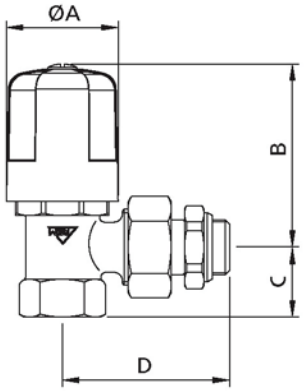

Code	Size	ØA mm	B mm	C mm	D mm
7.03.00	G3/8″	33,5	55	19,5	50
7.04.00	G1/2″	33,5	56	22,5	51,5
7.05.00	G3/4″	53	64,5	28	62,5
7.06.00	G1″	56	75	33,5	67,5
7.07.00	G1″1/4	65	82	37,5	81

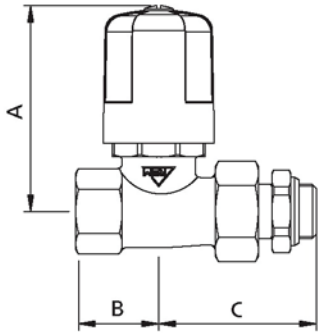

Code	Size	A mm	B mm	C mm
8.03.00	G3/8″	62	22,5	48,5
8.04.00	G1/2″	62	24,5	50
8.05.00	G3/4″	72	33	59,5
8.06.00	G1″	85	38	62
8.07.00	G1″1/4	97	41,5	75

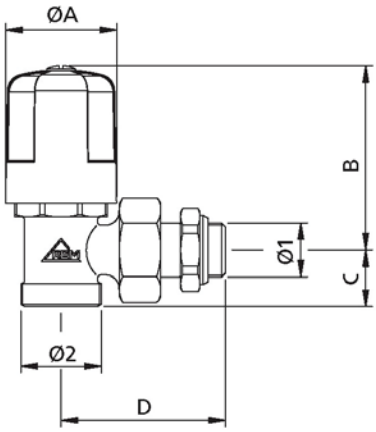

Code	Ø1	Ø2	ØA mm	B mm	C mm	D mm
27.03.X0	G3/8″	standard RBM	33,5	55,5	17	50
27.04.X0	G1/2″	standard RBM	33,5	55,5	17	51,5

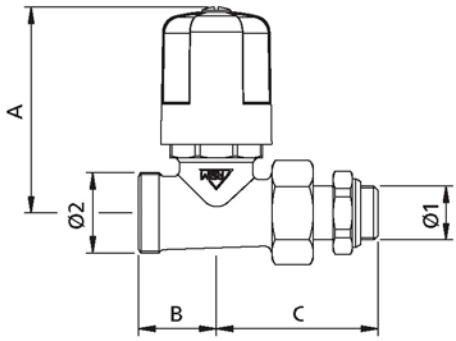

Code	Ø1	Ø2	A mm	B mm	C mm
28.03.X0	G3/8″	standard RBM	62	23,5	49
28.04.X0	G1/2″	standard RBM	62	23,5	50,5

100% MADE IN ITALY

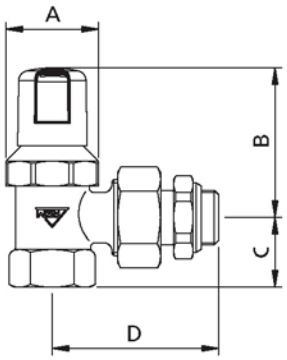

Code	Size	A mm	B mm	C mm	D mm
9.03.00	G3/8″	28	45	19,5	50
9.04.00	G1/2″	28	46	22,5	51,5
9.05.00	G3/4″	37	48,5	28	62,5
9.06.00	G1″	41	57,5	33,5	67,5
9.07.00	G1″1/4	48,5	68,5	37,5	81

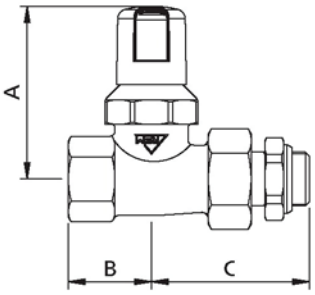

Code	Size	A mm	B mm	C mm
10.03.00	G3/8″	52	22,5	48,5
10.04.00	G1/2″	52	24,5	50
10.05.00	G3/4″	56	33	59,5
10.06.00	G1″	68	38	62
10.07.00	G1″1/4	83,5	41,5	75

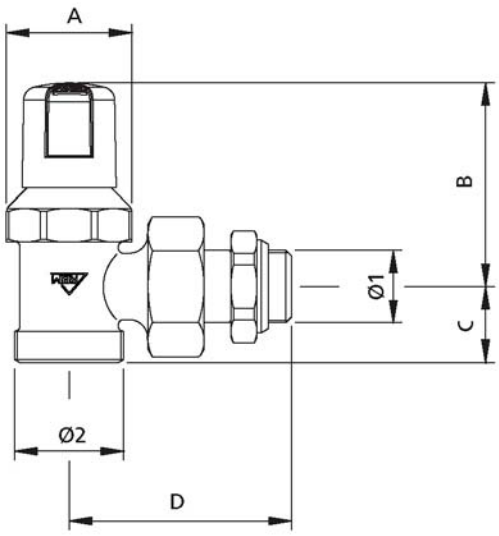

Code	Ø1	Ø2	A mm	B mm	C mm	D mm
29.03.X0	G3/8″	standard RBM	28	45,5	17	50
29.04.X0	G1/2″	standard RBM	28	45,5	17	51,5

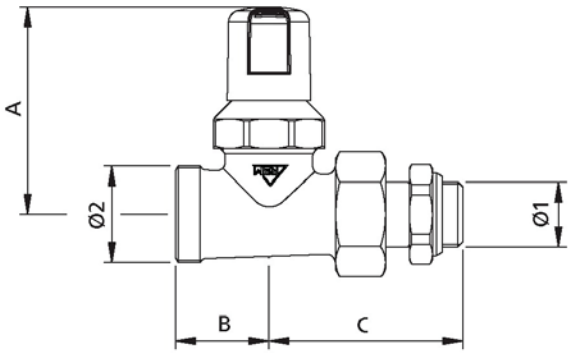

Code	Ø1	Ø2	A mm	B mm	C mm
30.03.X0	G3/8″	standard RBM	52	23,5	49
30.04.X0	G1/2″	standard RBM	52	23,5	50,5

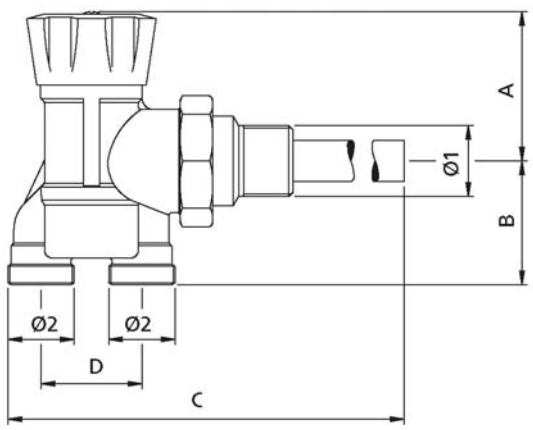

Code	Ø1	Ø2	A mm	B mm	C mm	D mm
25.05.X0	G3/4"	standard RBM	55	45,5	362	37
25.06.X0	G1"	standard RBM	55	45,5	362	37

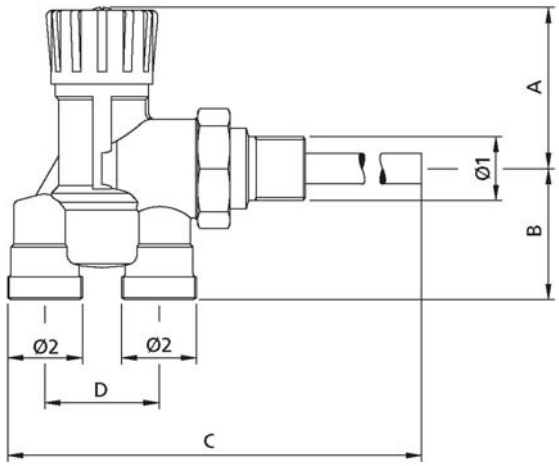

Code	Ø1	Ø2	A mm	B mm	C mm	D mm
22.04.00	G1/2"	standard RBM	52,5	42,5	363	37
22.04.20	G1/2"	standard RBM	52,5	42,5	114	37
22.05.X0	G3/4"	standard RBM	52,5	42,5	363	37

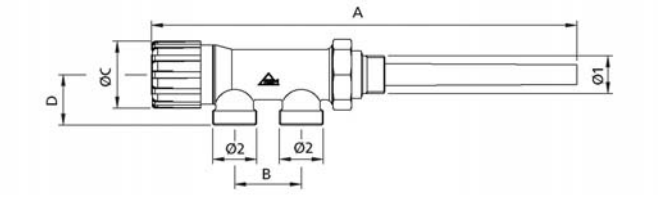

Code	Ø1	Ø2	A mm	B mm	ØC mm	D mm
585.04.X0	G1/2"	standard RBM	236,5	37	37	28
585.05.X0	G3/4"	standard RBM	236,5	37	37	28

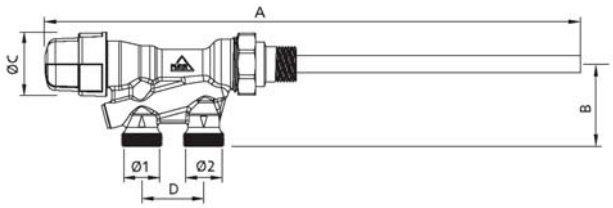

Code	Ø1	Ø2	A mm	B mm	ØC mm	D mm
1028.04.00	G1/2"	standard RBM	standard RBM	410	49	38
1028.05.00	G3/4"	standard RBM	standard RBM	410	49	38

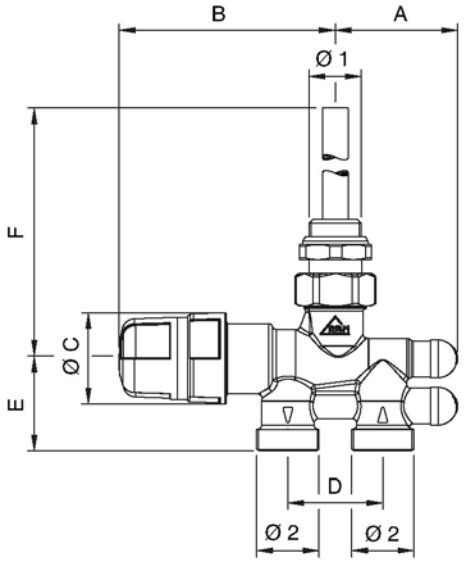

Code	Ø1	Ø2	A mm	B mm	ØC mm	D mm	E mm	F mm
754.04.00	G1/2"	standard RBM	47,5	85	35	37	36	353

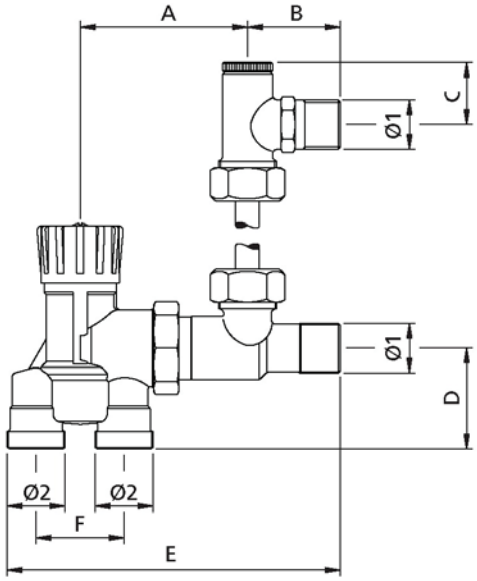

Code	Ø1	Ø2	A mm	B mm	C mm	D mm	E mm	F mm
22.04.90	G1/2"	standard RBM	70,5	39	26	42,5	140	37
424.04.X0	G1/2"	standard RBM	70,5	39	26	42,5	140	37

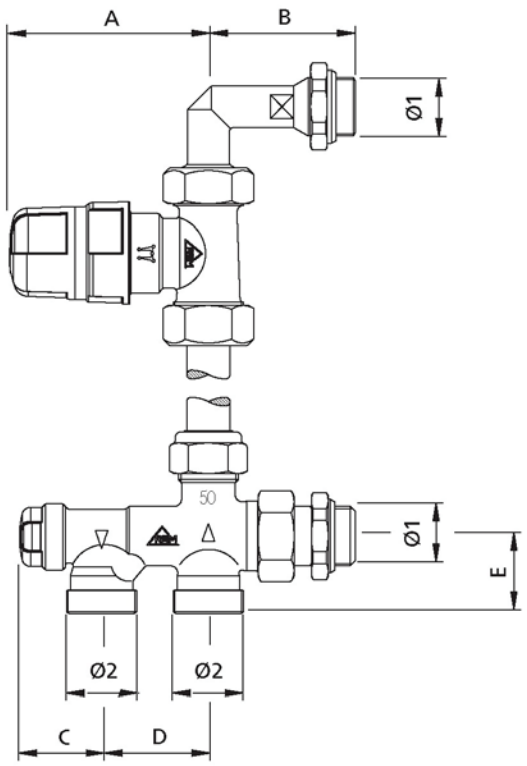

Code	Ø1	Ø2	A mm	B mm	C mm	D mm	E mm
223.04.X0	G1/2"	standard RBM	70	51	28,5	37	37

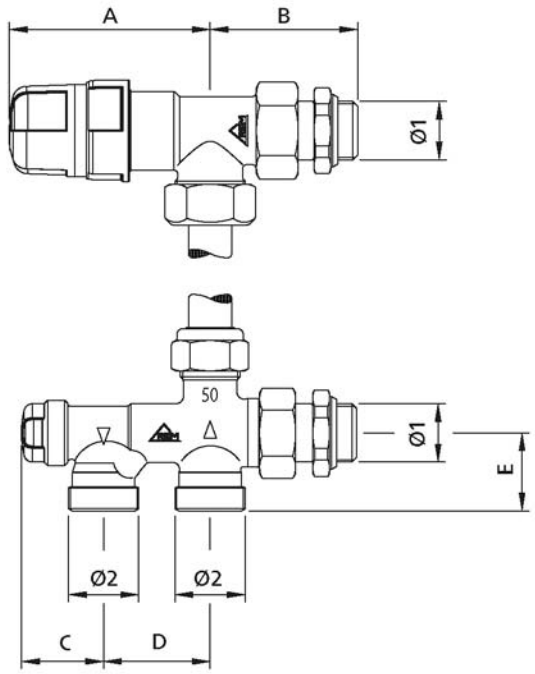

Code	Ø1	Ø2	A mm	B mm	C mm	D mm	E mm
225.04.X0	G1/2"	standard RBM	70,5	51,5	28,5	37	37

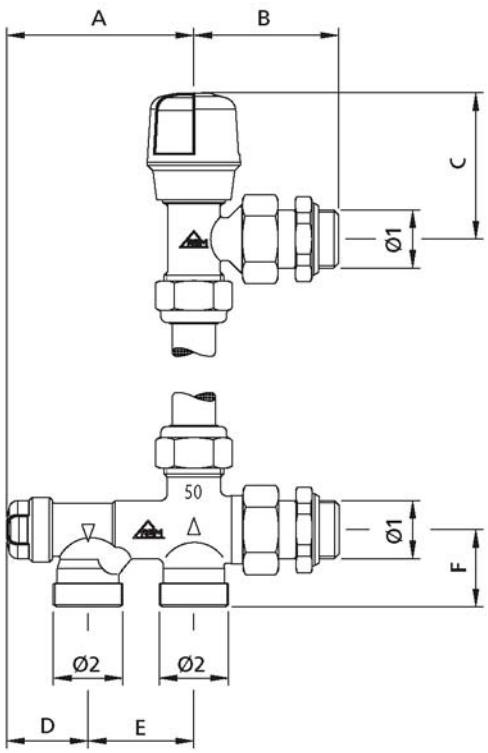

Code	Ø1	Ø2	A mm	B mm	C mm	D mm	E mm	F mm
249.04.X0	G1/2"	standard RBM	65,5	51	51,5	28,5	37	37

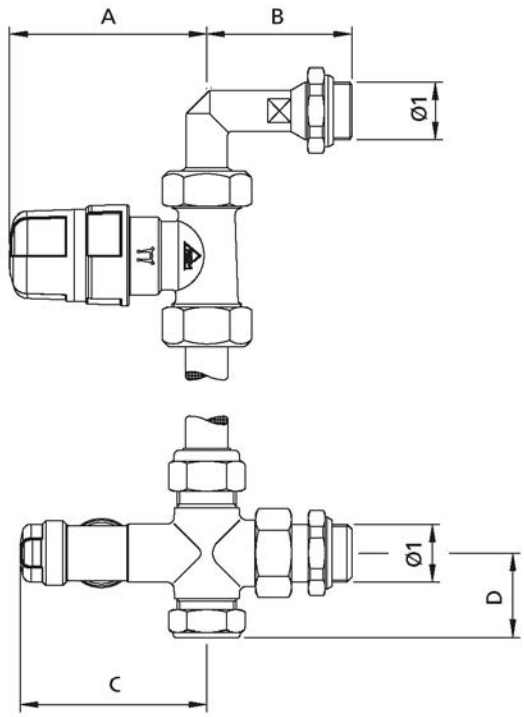

Code	Ø1	Diverter valve connections	A mm	B mm	C mm	D mm
211.04.X0	G1/2"	standard RBM	70,5	51	65,5	29,5

DIMENSIONAL DRAWINGS

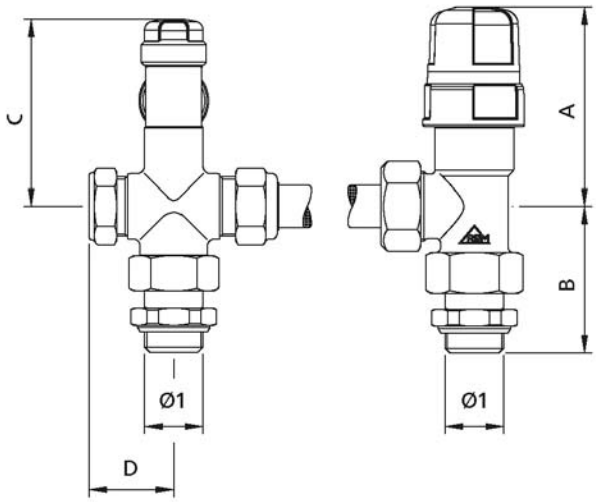

Code	Ø1	Diverter valve con-nections	A mm	B mm	C mm	D mm
213.04.X0	G1/2"	standard RBM	70,5	51,5	65,5	29,5

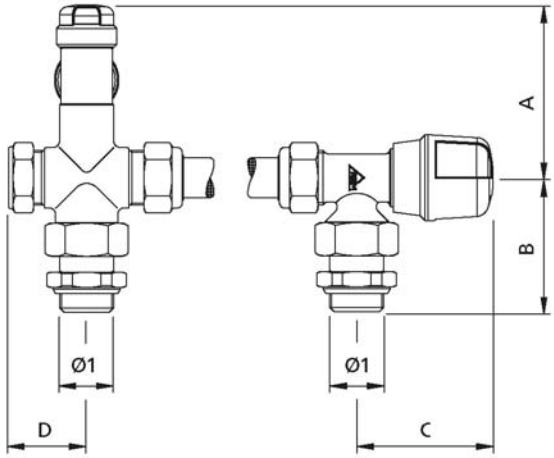

Code	Ø1	Diverter valve con-nections	A mm	B mm	C mm	D mm
212.04.X0	G1/2"	standard RBM	65,5	51	51,5	29,5

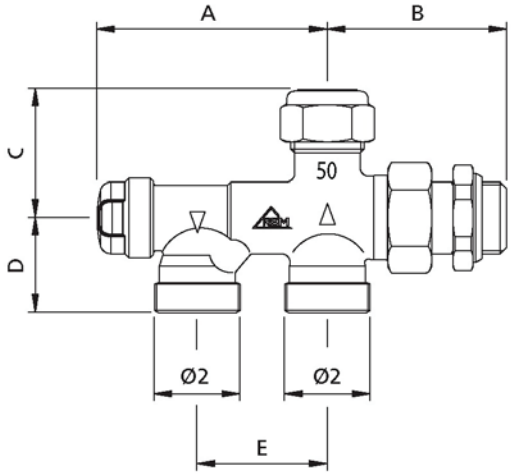

Code	Ø1	Ø2	A mm	B mm	C mm	D mm	E mm
16X.04.X0	G1/2"	standard RBM	65,5	51	37	27	37

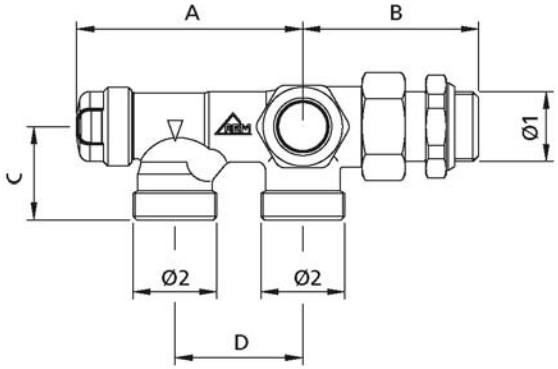

Code	Ø1	Ø2	A mm	B mm	C mm	D mm
214.04.X0	G1/2"	standard RBM	65,5	51	27	37

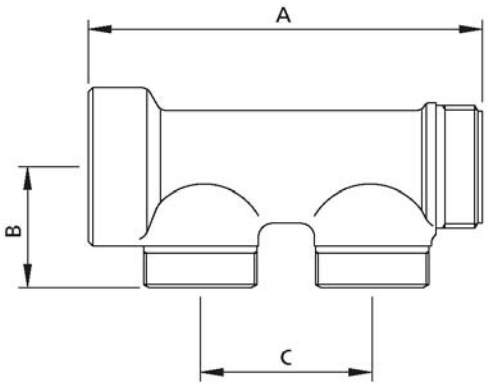

Code	N. ways	Body connec-tions	Side connections	A mm	B mm	C mm
100.06.50	2	G 1″	G 3/4″ EK	119	30	50
101.06.50	3	G 1″	G 3/4″ EK	169	30	50
102.06.50	4	G 1″	G 3/4″ EK	219	30	50
134.05.50	2	G 3/4″	G 1/2″	84	26	37
135.05.50	3	G 3/4″	G 1/2″	121	26	37
150.05.50	4	G 3/4″	G 1/2″	157	26	37
293.05.00	3	G 3/4″	G 1/2″	105	26	50
294.05.00	4	G 3/4″	G 1/2″	155	26	50
295.05.00	5	G 3/4″	G 1/2″	205	26	50
296.05.00	6	G 3/4″	G 1/2″	255	26	50
297.05.00	7	G 3/4″	G 1/2″	305	26	50
298.05.00	8	G 3/4″	G 1/2″	355	26	50
34.05.00	1	G3/4″	standard RBM	47,5	26,5	37
34.06.00	1	G1″	standard RBM	47,5	30,5	37
35.05.00	2	G3/4″	standard RBM	84,5	26,5	37
35.05.40	2	G3/4″	G1/2″F	84,5	26,5	37
35.06.00	2	G1″	standard RBM	84,5	30,5	37
35.06.40	2	G1″	G1/2″F	84,5	30	37
35.07.00	2	G1″1/4	standard RBM	84,5	35	37
36.05.00	3	G3/4″	standard RBM	121,5	26,5	37
36.05.40	3	G3/4″	G1/2″F	121,5	26,5	37
36.06.00	3	G1″	standard RBM	121,5	30,5	37
36.06.40	3	G1″	G1/2″F	121,5	30	37
36.07.00	3	G1″1/4	standard RBM	121,5	35	37
426.06.00	2	G 1″	G 1/2″	106	30,5	50
427.06.00	3	G 1″	G 1/2″	156	30,5	50
428.06.00	4	G 1″	G 1/2″	206	30,5	50

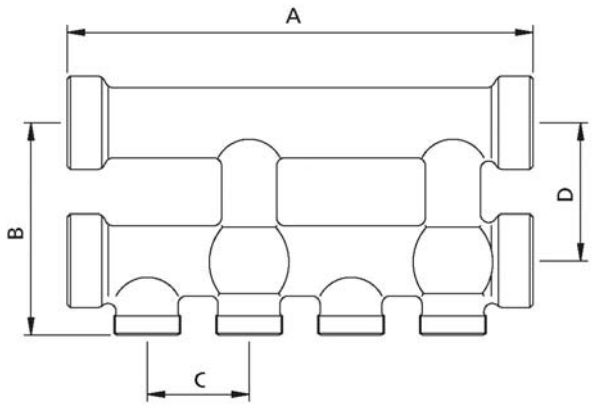

Code	N. ways	Body connec-tions	Side connections	A mm	B mm	C mm	D mm
59.05.00	4	G3/4″	standard RBM	169	77	37	50
59.06.00	4	G1″	standard RBM	169	80	37	50
60.05.00	6	G3/4″	standard RBM	243	77	37	50
60.06.00	6	G1″	standard RBM	243	80	37	50
61.05.00	8	G3/4″	standard RBM	317	77	37	50
61.06.00	8	G1″	standard RBM	317	80	37	50
62.05.00	10	G3/4″	standard RBM	391	77	37	50
62.06.00	10	G1″	standard RBM	391	80	37	50

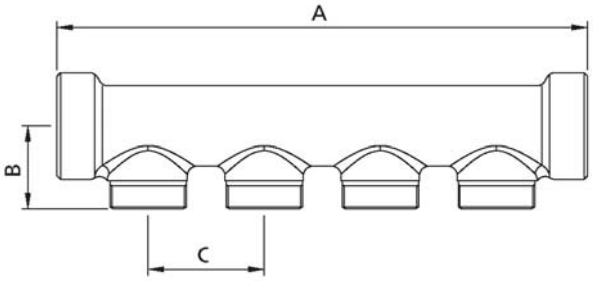

Code	N. ways	Body connec-tions	Side connections	A mm	B mm	C mm
63.05.00	4	G3/4″	standard RBM	169	26,5	37
63.05.20	5	G3/4″	standard RBM	206	26,5	37
63.06.00	4	G1″	standard RBM	169	30,5	37
63.06.20	5	G1″	standard RBM	206	30,5	37
64.05.00	6	G3/4″	standard RBM	243	26,5	37
64.05.20	7	G3/4″	standard RBM	280	26,5	37
64.06.00	6	G1″	standard RBM	243	30,5	37
64.06.20	7	G1″	standard RBM	280	30,5	37
65.05.00	8	G3/4″	standard RBM	317	26,5	37
65.06.00	8	G1″	standard RBM	317	30,5	37
66.06.00	10	G1″	standard RBM	391	30,5	37

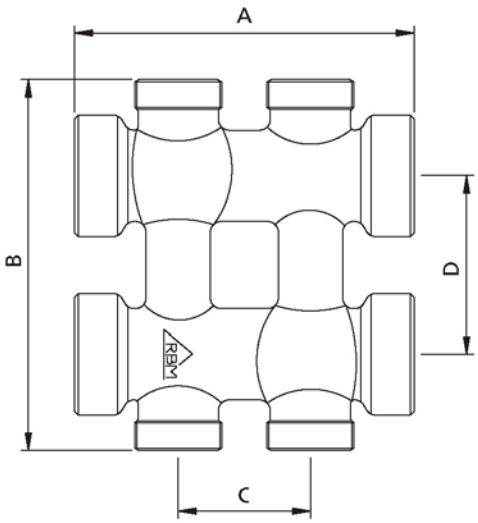

Code	N. ways	Body connec-tions	Side connections	A mm	B mm	C mm	D mm
52.05.00	4+4	G3/4″	standard RBM	169	104	37	50
52.05.20	2+2	G3/4″	standard RBM	95	104	37	50
52.06.00	4+4	G1″	standard RBM	169	115	37	55
52.06.20	2+2	G1″	standard RBM	95	115	37	55
53.05.00	6+6	G3/4″	standard RBM	243	104	37	50
53.06.00	6+6	G1″	standard RBM	243	115	37	55
54.05.00	8+8	G3/4″	standard RBM	317	104	37	50
54.06.00	8+8	G1″	standard RBM	317	115	37	55
55.05.00	10+10	G3/4″	standard RBM	391	104	37	50
55.06.00	10+10	G1″	standard RBM	391	115	37	55

DIMENSIONAL DRAWINGS

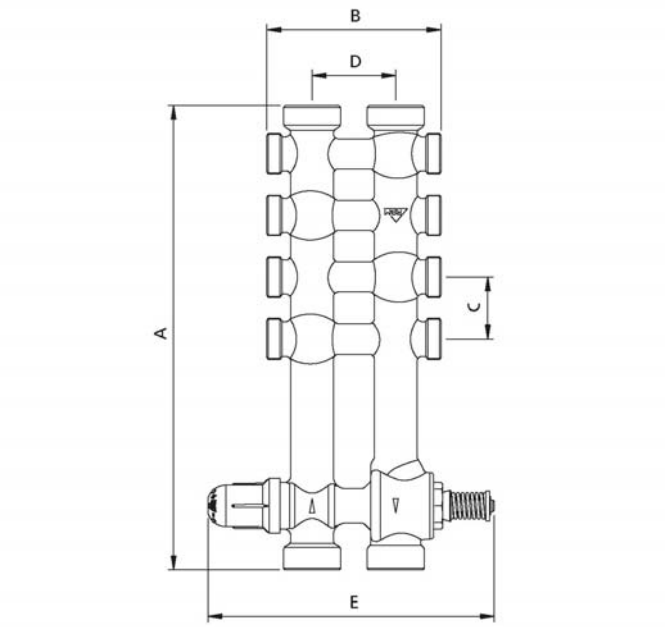

Code	N. ways	Body connec-tions	Side connections	A mm	B mm	C mm	D mm	E mm
433.05.00	4+4	G3/4″	standard RBM	278,5	104	37	50	171
433.06.00	4+4	G1″	standard RBM	280,5	115	37	55	176
434.05.00	6+6	G3/4″	standard RBM	352,5	104	37	50	171
434.06.00	6+6	G1″	standard RBM	354,4	115	37	55	176
435.05.00	8+8	G3/4″	standard RBM	426,5	104	37	50	171
435.06.00	8+8	G1″	standard RBM	428,5	115	37	55	176

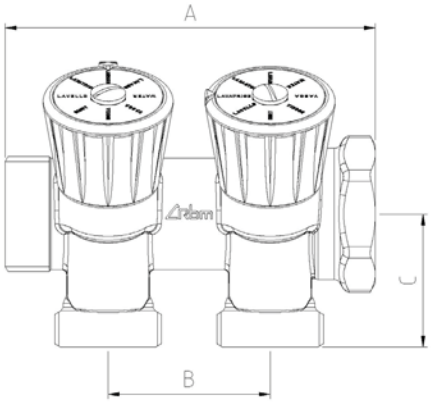

Code	N. ways	Body connec-tions	Side connections	A mm	B mm	C mm
1330.05.00	4	G3/4″	standard RBM	158,5	37	30,5
1330.05.60	4	G3/4	G1/2″	158,5	37	30,5
1330.06.00	4	G1″	standard RBM	158,5	37	32,5
1330.06.60	4	G1″	G1/2″	158,5	37	32,5
171.05.00	2	G3/4″	standard RBM	84,5	37	30,5
171.05.60	2	G3/4	G1/2″	84,5	37	30,5
171.06.00	2	G1″	standard RBM	84,5	37	32,5
171.06.60	2	G1″	G1/2″	84,5	37	32,5
172.05.00	3	G3/4″	standard RBM	121,5	37	30,5
172.05.60	3	G3/4	G1/2″	121,5	37	30,5
172.06.00	3	G1″	standard RBM	121,5	37	32,5
172.06.60	3	G1″	G1/2″	121,5	37	32,5

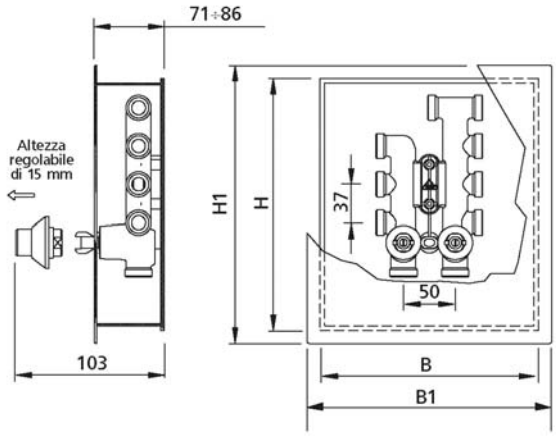

Code	B mm	H mm	B1 mm	H1 mm
903.00.X0	211	281	236	306
967.00.X0	211	244	236	269

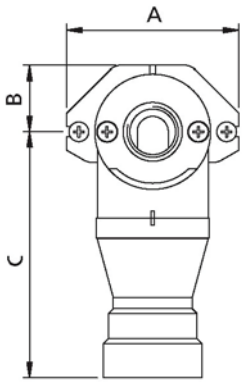

Code	Pipe connection	Cock connection	A mm	B mm	C mm
181.00.X0	standard RBM	G1/2″ F	70	27	100

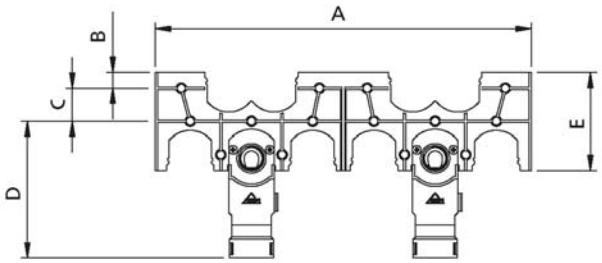

Code	Pipe connection	Cock connec-tion	A mm	B mm	C mm	D mm	E mm
185.00.X0	standard RBM	G1/2″F	-	-	-	-	-
185.00.20	standard RBM	G1/2″F	307	13	27	111,5	80

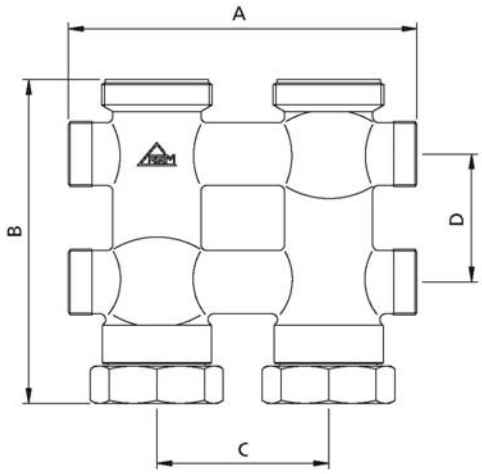

Code	N. ways	Body connec-tions	Side connections	A mm	B mm	C mm	D mm
95.08.00	2+2	G1″1/2	Withworth W28x19F	150	139	74	55

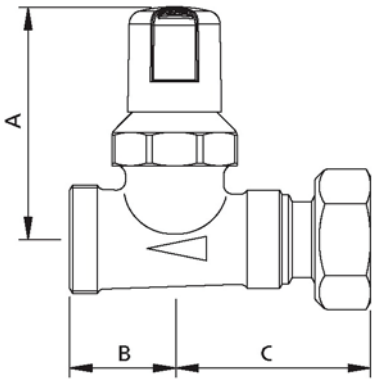

Code	Connections	A mm	B mm	C mm
106.00.00	standard RBM	52	23,5	44

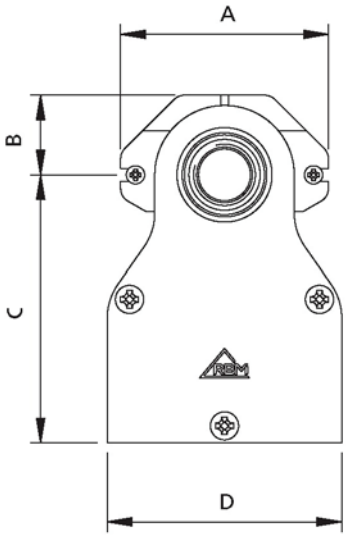

Code	Pipe connection	Cock connec-tion	A mm	B mm	C mm	D mm
186.00.00	standard RBM	G1/2″F	70	27	90,5	79

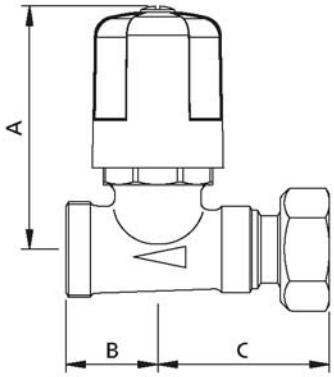

Code	Connections	A mm	B mm	C mm
105.00.00	standard RBM	62	23,5	44

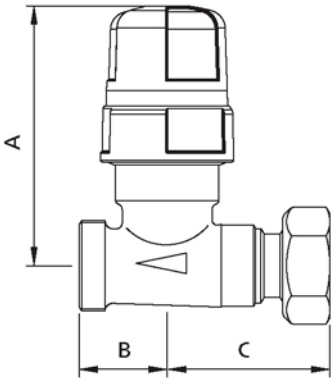

Code	Connections	A mm	B mm	C mm
556.00.00	standard RBM	69	23,5	44

DIMENSIONAL DRAWINGS

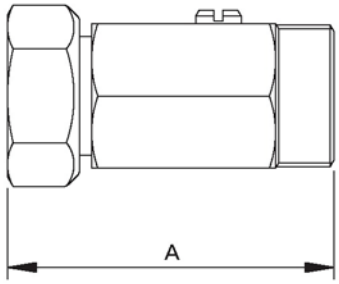

Code	Connections	A mm
108.00.00	standard RBM	56,5

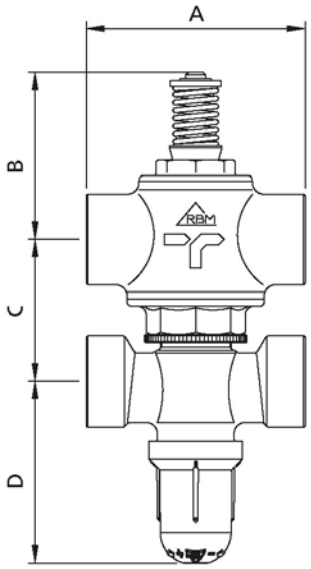

Code	Size	A mm	B mm	C mm	ØD mm
114.05.20	G3/4″	77	59	114÷119	64
114.05.70	G3/4″	77	59	50÷55	64
114.06.20	G1″	81	59	114÷119	66
114.06.70	G1″	81	59	50÷55	66

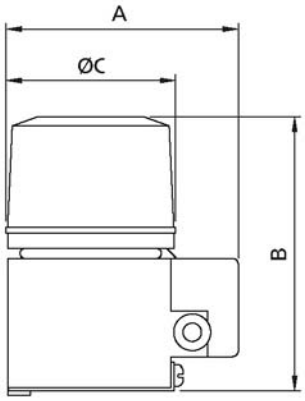

Code	A mm	B mm	ØC mm
360.00.X0	75	89	55

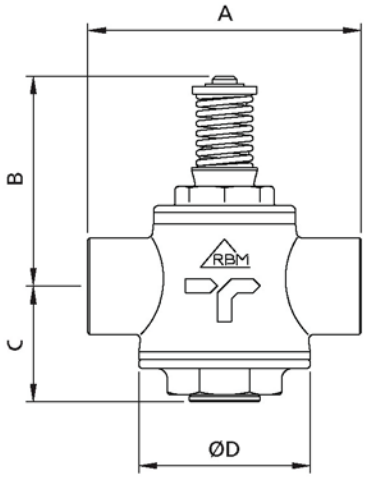

Code	Size	A mm	B mm	C mm	ØD mm
112.04.70	G1/2″	77	59	33	48
112.05.70	G3/4″	77	59	33	48
112.06.70	G1″	81	59	33	48
113.04.70	G1/2″	77	59	33	48
113.05.70	G3/4″	77	59	33	48
113.06.70	G1″	81	59	33	48

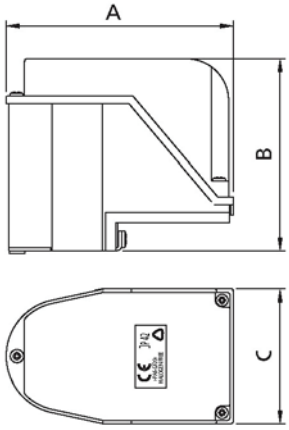

Code	A mm	B mm	C mm
373.00.X0	108,5	92	64,5

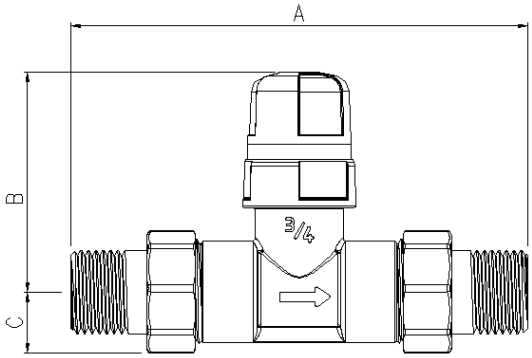

Code	Size	N. ways	A mm	B mm	C mm
814.05.20	G3/4″	2	143	69	16
814.06.20	G1″	2	160,5	69	19,5

100% MADE IN ITALY

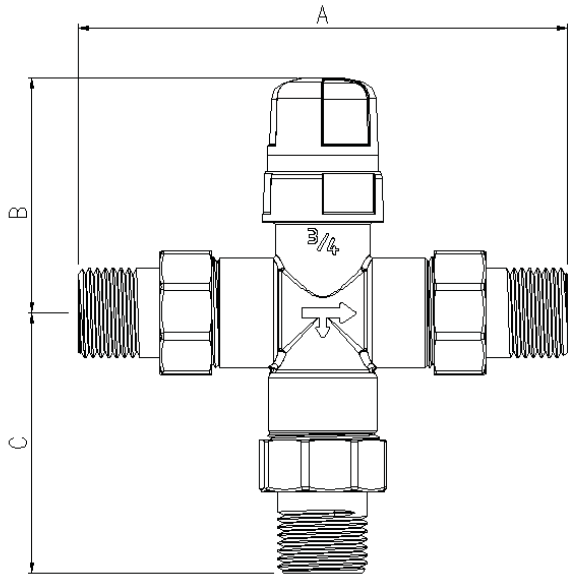

Code	Size	N. ways	A mm	B mm	C mm
813.05.20	G3/4"	3	143	69	76
813.06.20	G1"	3	160,5	69	85

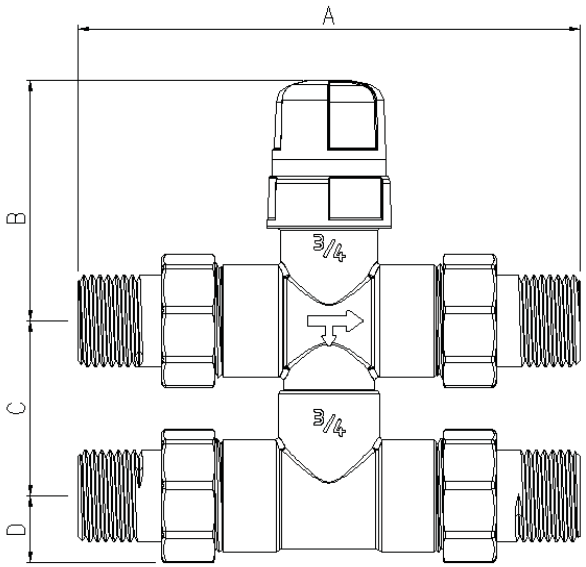

Code	Size	N. ways	A mm	B mm	C mm	D mm
736.05.20	G3/4"	4	143	69	50 ÷ 55	16
736.06.20	G1"	4	160,5	69	50 ÷ 55	19,5

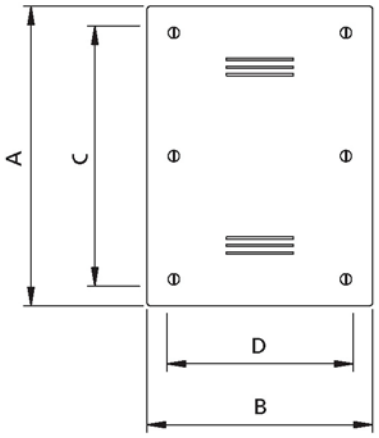

Code	A mm	B mm	C mm	D mm	Depth mm
362.35.00	403	303	350	250	100
362.50.00	553	303	500	250	100
85.35.00	403	303	350	250	
85.40.00	553	453	500	400	
85.50.00	553	303	500	250	
85.58.00	633	363	580	310	
85.75.00	803	413	750	360	
86.35.00	403	303	350	250	85÷100
86.40.00	553	453	500	400	85÷100
86.50.00	553	303	500	250	85÷100
86.58.00	633	363	580	310	85÷100
86.75.00	803	413	750	360	95÷120